PL-852D23/33F-AM

2MP Starlight/WDR Network PTZ

- 1/2.8" 1080P Sony Sensor
- Max 25/30fps@1080P streaming
- Support Dual stream encoding
- IP66 Rating
- TWDR/BLC/2D&3D noise reduction

2MP | 3D DNR | IP66

System Overview

W series high speed dome is a range of project level PTZ with industrial rugged design. Featured by powerful zoom camera and stepping motor, it's perfect solution to deliver high quality image in dark or intense light contrast occasions, with smooth pan/tilt and fast focus.

With speed up to 180°/s and low illumination to 0.052lux , it promises a large video coverage and more secured details in some extreme outdoors applications, like Airport, Seaport, Gas station, mine exploring etc.

Functions

WDR

Powered by ZKTeco strong ISP algorithm and Starvis sensor, it could achieve excellent picture images at extreme lighting contrast background.

Starlight

To deal with extreme low light challenge, W series PTZ which is equipped with industry leading optical workmanship and ISP adjustment could easily handle it with crystal clear color image in super low light to 0.052lux.

Smart H.265+

Delivering high quality video with up to 70% lower bandwidth. H.265+ is the optimized evolution of H.265 and traditional H.264.

Harsh conditions

W series PTZ could run normally in harsh outdoors environment, standing with temperature range from -20℃~+55℃ with 95% humidity. Protected by 6KV lightning rating and wide voltage range design, it promises the 24/7 monitoring for the critical area without trouble.

Technical Parameters

Camera

Model	PL-852D23F-AM	PL-852D33F-AM
Image Sensor	2MP 1/2.8 inch Sensor	
Lens	23x f=4.7mm～108.1mm	33x f=4.3mm～141.9mm
Scanning System	Progressive	
Eletronic Shutter	1/15s - 1/5,000s	

Min. illumination	0.052Lux/F1.6(color), 0Lux with IR on
IR Distance	Up to 150 meters
Iris	F1.6(W)-F3.0(T)
S/N Ratio	≥55dB

Video

Video Compression	H.264
Resolution	2MP(1920x1080)/720P(1280x720)/ CIF(352X288/352X240)
Bit Rate Control	CBR/VBR
Bit Rate	Main stream : 1920x1080(1~25/30fps) Sub stream : 720x576(1~25/30fps)
Audio Compression	G.711u
BLC	Supported
WDR	120DB

Day/Night	Auto(ICR)/Color/B/W
White Balance	Auto/ White lamp/ 4000K/ 5000K/ Sunshine/ dark clouds/ flash light/ fluorescent lamp/ high fluorescent lamp/ water bottom/ customized
Gain Control	Auto/Manual
Noise Reduction	2D & 3D DNR
Motion Detetion	Supported
Privacy Mask	Up to 4 areas

Interface

Audio I/O	1/1
Alarm I/O	2/1
TF card	Supported,Up to 64GB

Analog video output	1
Network interface	1xRJ45 10M/100M network adaptive
Reset	1

Network

Protocol	IPv4, TCP, UDP, HTTP, HTTPS, SMTP, FTP, NTP, DNS, DDNS, DHCP, RTSP, RTP, RTCP, SNMP
Onvif	Onvif profile S
Max. online User	4

Mobile App	AntarView Pro
VMS	AntarVis 2.0

PTZ

Pan/Tilt Range	Pan: 0°~360°, Tilt: 0°~90°	
Rotation speed	Manual: 0.1~150°/s, Preset:200°/s	Manual: 0.1~180°/s, Preset:200°/s
Preset	255	
PTZ mode	4 cruise, 4 pattern, 1 horizontal scan	
Idle Motion	Preset/Scan/Cruise/Pattern/OFF	
Protocol	Pelco-D, Pelco-P	
Ingress Protection	IP66	

Working Environment	-20℃~+55℃/0%~95% RH
Power Supply	DC24V1.5A/ PoE(IEEE802.3at)
Power Consumption	Max 36W(power on)
Lighting Protection	EDS 6000V
Default bracket	Wall mount
Dimensions	380(H)×216(D)mm
Net Weight	5.5KG

Ordering Information

Type	Part Number	Description
2MP PTZ Camera	PL-852D23F-AM	2MP 23x PTZ camera
	PL-852D33F-AM	2MP 33x PTZ camera

Dimensions (mm)

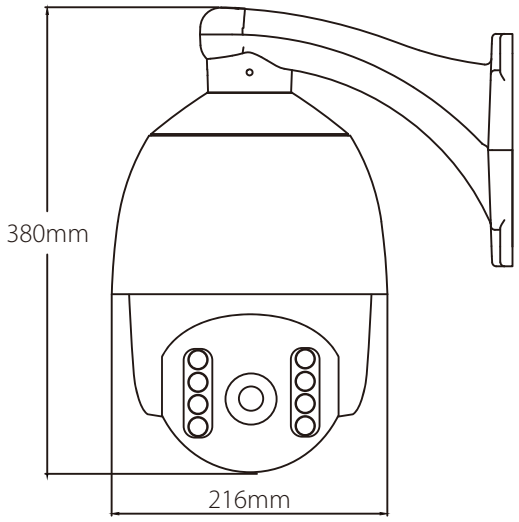

More details

ZKTECO CO.,LTD.
www.zkteco.com
E-mail: sales@zkteco.com

Copyright ©2018 ZKTECO CO., LTD. All rights reserved.