PL-52A12G

2MP 12x Starlight Network PTZ

- 1/1.8" Starlight 2MP Sony Sensor
- Max 25/30fps@2MP Recording
- Support Dual Stream Encoding
- IP66 Rating
- DWDR/BLC/2D&3D Noise Reduction

2MP | 3D DNR | IP66

System Overview

PL-52A series super low light dome is a range of competitive 6 inch PTZ with compact design. The series are ideal choices for SMB solutions, such as buildings, factories, schools which are designed for indoor and outdoor.

With pan speed up to 480°/s, and tilt speed up to 240°/s, promise a large viden coverage and secured details. Its rugged casing is rated with IP66.

Functions

H.265+

Delivering high quality video with up to 70% lower bandwidth.

H.265+ is the optimized evolution of H.265 and traditional H.264.

The Smart H.265+ includes a series of encoding strategy like Dyamic ROI, smart 2D&3D noise reduction etc to save up to 70% bandwidth and storage.

Harsh conditions

ZKTeco PTZ cameras could run normally in harsh environment, working temperature range from -40℃~+60℃ with 95% humidity.

Technical Parameters

Camera

Model	PL-52A12G	Scanning System	Progressive
Image Sensor	Starlight 2MP 1/1.8" Sony Sensor	Eletronic Shutter	1/2s - 1/20,000s
Lens	12X f=7mm~84mm	Min. illumination	Color : 0.002Lux B/W : 0.0002Lux (0 Lux when IR on)

Video

Video Compression	H.265+/H.265/H.264+/H.264	WDR	DWDR
Resolution	1080P(1920x1080)/720P(1280x720) /CIF(352X288/352X240)	Day/Night	Auto(ICR)/Color/B/W
		White Balance	Auto/Manual/Indoor/Outdoor
Bit Rate Control	CBR/VBR	Gain Control	Auto
Bit Rate	Main stream: 64Kbps~1000Kbps Sub stream: 32Kbps~2000Kbps	Noise Reduction	2D & 3D DNR
		Motion Detetion	Supported
Audio Compression	G.711a/G.711u(32Kbps)/PCM(128Kbps)	Privacy Mask	Up to 4 areas
BLC	Supported		

Optional

Audio I/O	Optional	SD card slot	Optional
Alarm I/O	Optional		

Network

Protocol	RTSP,FTP,SMTP,TCP/IP,UDP,DHCP,RTP,ARP,DNS,DDNS	Max. online User	Main stream : 3 Sub stream : 6
Onvif	Onvif profile S	Web Browser	IE,Chrome,Firefox

P/T

Pan/Tilt Range	Pan: 0°~360° , Tilt: 0°~93°	Ingress Protection	IP66
Pan Speed	0~480°/s	Working Environment	-40℃~+60℃
Tilt Speed	0~240°/s	Power Supply	DC 12V4A
Preset	220	Lightning Protection	EDS 6000V
Preset Speed	1-64 optional	OSD Menu	Call 95 Preset
PTZ Mode	8 tour, 4 pattern, 1 horizontal scan	Default Bracket	Wall Mount
Idle Motion	Activate preset/Scan/ Tour if there is no command in specified period	Dimensions	Φ210(mm)×287(mm)
		Net Weight	2.5KG
Protocol	Pelco-D, Pelco-P	Gross Weight	4.5KG

Ordering Information

Type	Part Number	Description
2MP PTZ Camera	PL-52A12G	2MP PTZ camera
	PL-52A12G-M	2MP PTZ camera with alarm and SD slot
	PL-52A12G-A	2MP PTZ camera with audio and SD slot
Accessories	MT01	Corner mount
	MT02	Pole mount
	PB02	Pendant Mount

Accessories

Included:

Wall Mount

DC12V/4A
Power Supply

Optional:

PB02
Pendant Mount

MT02
Pole Mount

MT01
Corner Mount

Dimensions (mm)

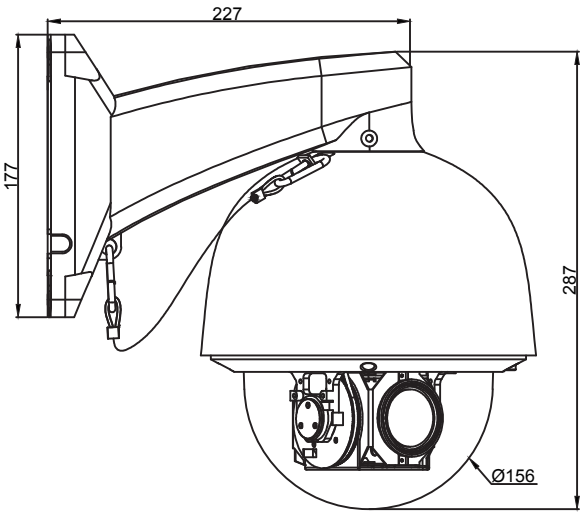

Wall Mount	Pendant Mount
Default	PB02
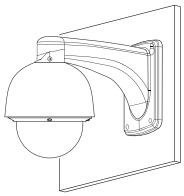	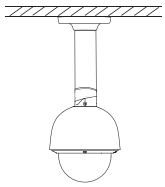
Corner Mount	**Pole Mount**
MT01	MT02
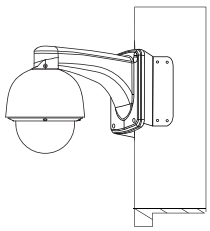	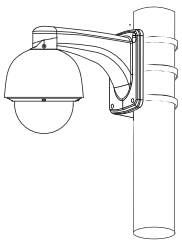

More details

ZKTECO CO.,LTD.
www.zkteco.com
E-mail: sales@zkteco.com

Copyright ©2018 ZKTECO CO., LTD. All rights reserved.