Parking Barrier Installation Guide

Applicable Models: PB 1000 / 2000

Version: 1.0 Date: Nov. 2017

1. Cable Embedding

Procedure

1) Preparation: protective sleeve (φ25, black) and standard power wire (RVV3*1.0).
2) Route cables to be connected with protective sleeves in advance.
3) Use a tool to open a cable tray on the ground, as shown in figure 1-1.

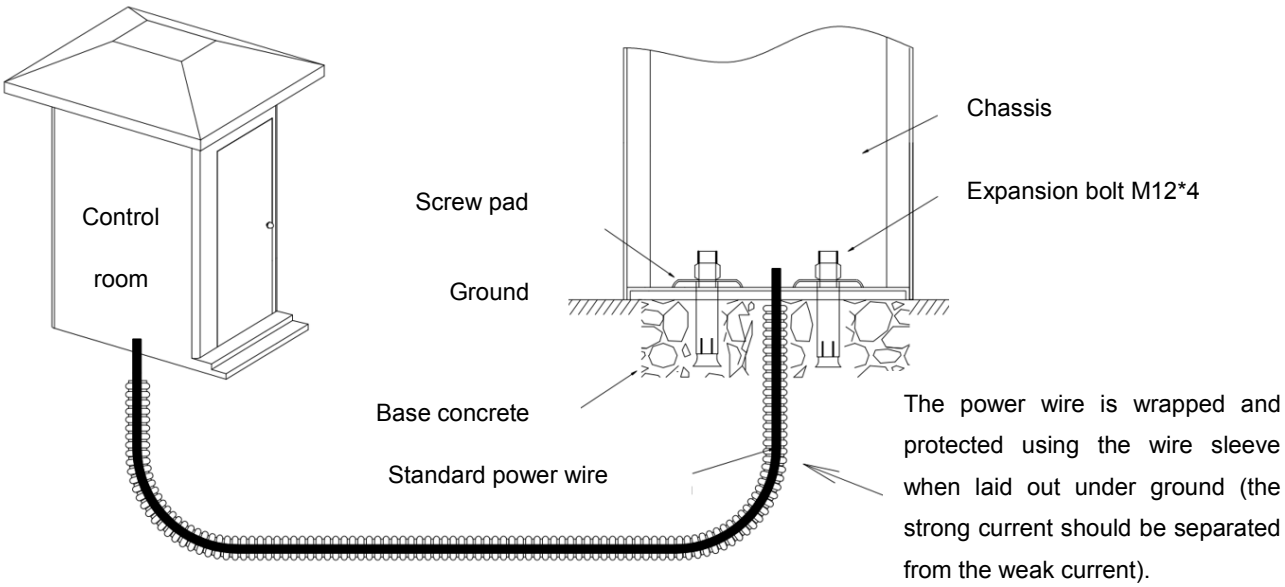

Figure 1-1

2. Installation Steps of Chassis

1) Use positioning soft tapes to mark the installation position of the chassis.
2) Drive four expansion bolts into the positioning soft tapes, as shown in figure 2-1
3) Remove the access door and install the parking barrier.
4) Install pads and use a wrench to tighten nuts, as shown in figure 2-2.
5) Install the access door.

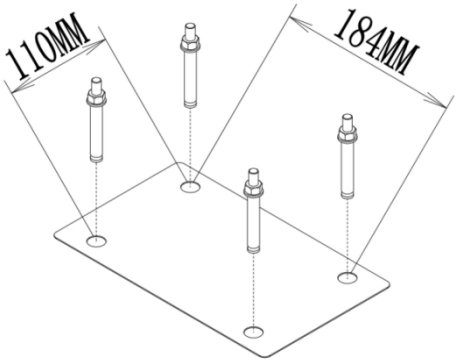

Figure 2-1

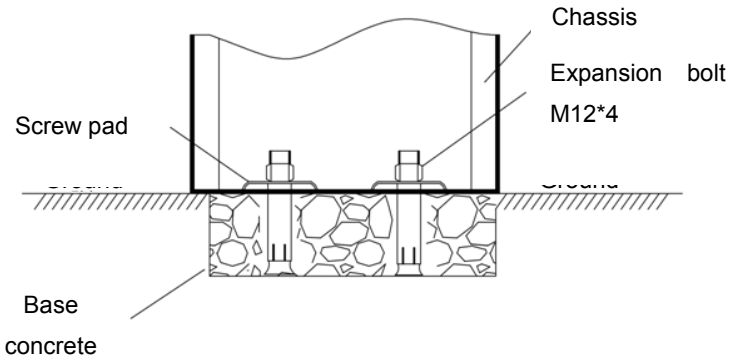

Figure 2-2

3. Installation Steps of Boom

1) Take out the booms, as shown in the figure 3-1.

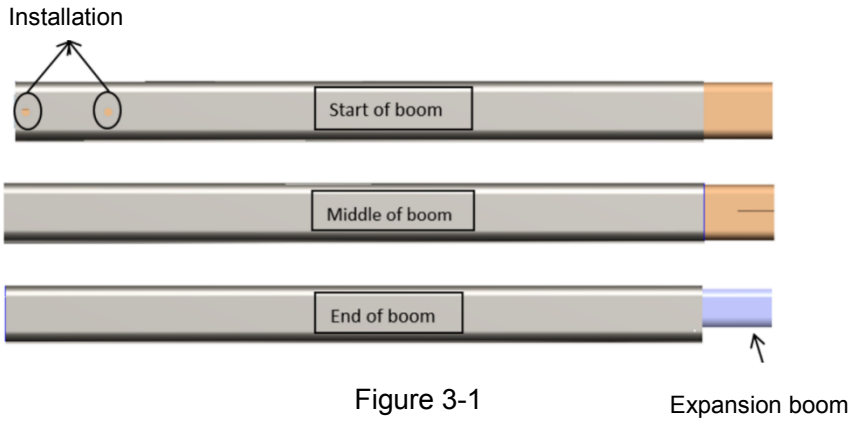

Figure 3-1

2) Apply glue to the protruding part and the inner wall of the boom. After insert it into the groove of another boom. Assemble into a whole. as shown in the figure 3-2.

3) Wipe off spilled glue with cloth.

4) Put the expansion boom in the main boom, adjust the length of the expansion boom, and fasten the expansion boom in screws, as shown in the figure 3-3.

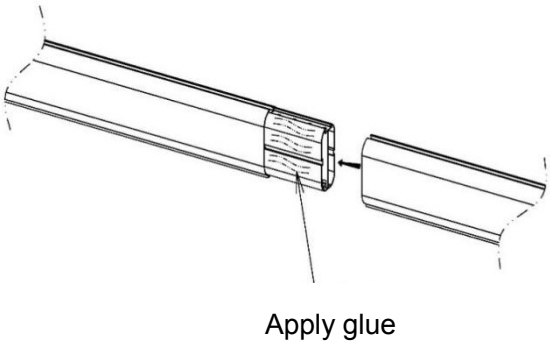

Figure 3-2

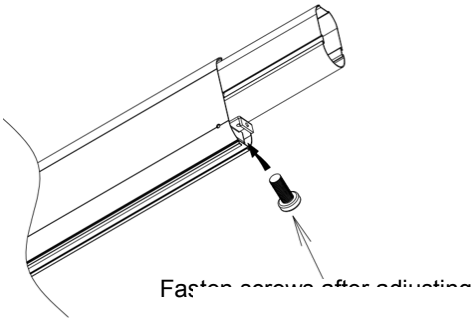

Figure 3-3

5) Install decorative cap A on the expansion boom, fasten the decorative cap to the fixed plate of the expansion boom, and then install decorative cap B to the end of the expansion boom, as shown in the figure 3-4.

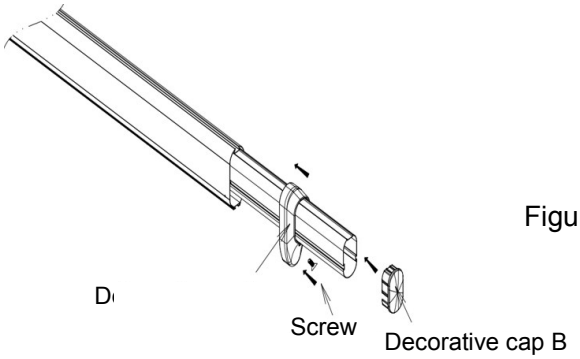

Figure 3-4

6) Install the boom gasket, as shown in the figure 3-5.

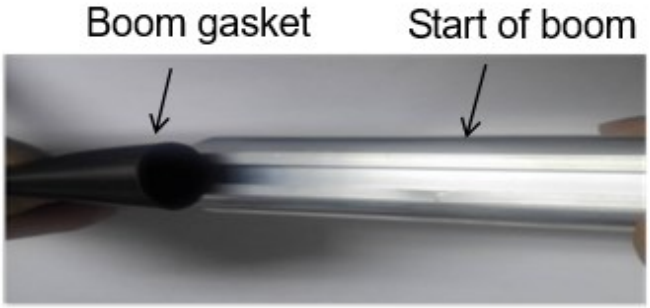

Figure 3-5

7) Wait 30 minutes after the glue cured, mount the boom in the device., as shown in the figure 3-6.

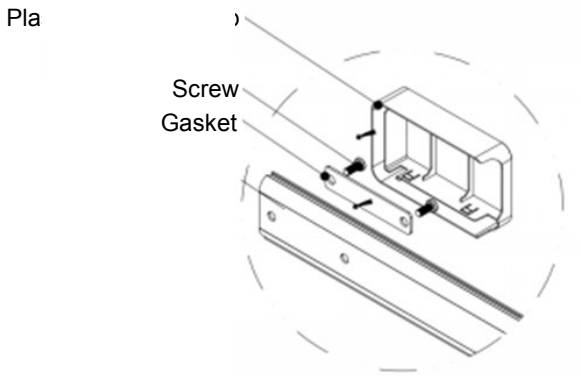

Figure 3-6

2. Wiring Diagram

1) Wiring diagram of the control board

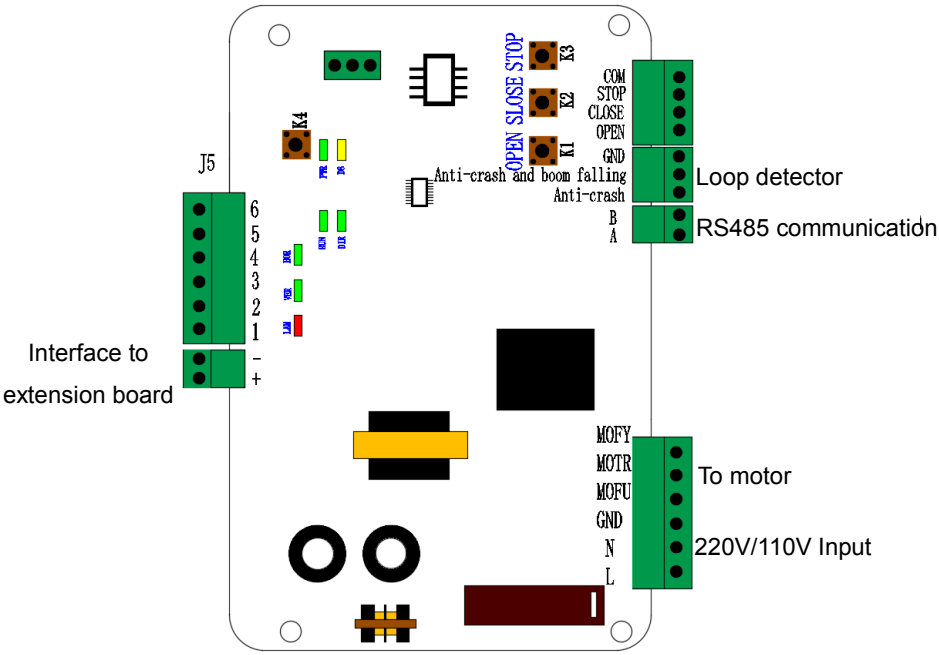

Delete all transmitter

Press and hold the 'K4 button' on the controller，while the yellow light flashes 8 seconds that mean the pairing has entered. After press the 'stop button' on control board until D9 red light flashes one time. The operation successes and will delete all the registered transmitters.

Register the transmitter

Press 'K4 button' until D8 yellow light flashes. Hold the 'K4 button', press any button on transmitter until D9 red light flashed one time. Maximum 7 different code transmitters can be registered.

2) Wiring diagram of the extension board

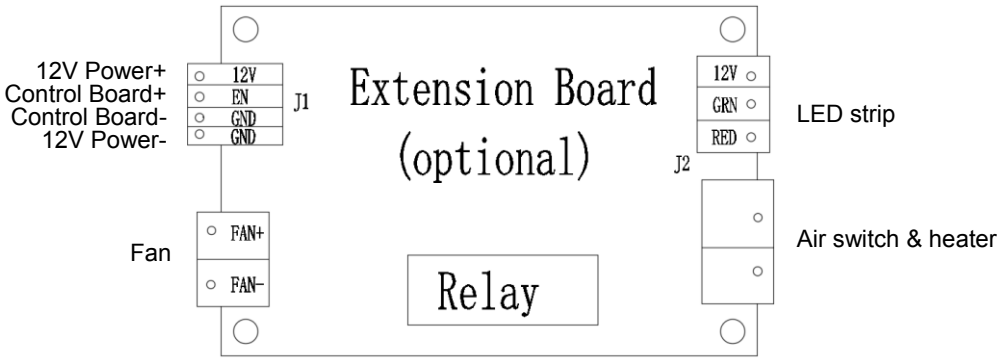

3. Commissioning Procedure

1) If the boom fails to fall into a level position, adjust position A; if the boom fails to be lifted upright, adjust position B. Properly adjust the levelness of the falling boom and the verticality of the lifted boom.
2) If the boom shakes during falling or lifting, adjust position C. The shaking that occurs to lifting is caused by the overlarge spring force. In this case, loosen the screws for several coils. If the boom shakes during falling, tighten the screws for several coils to reach the optimal state.
3) Use the motor cranks to lift the boom in the case of a power failure, as shown in the figure 5-1.

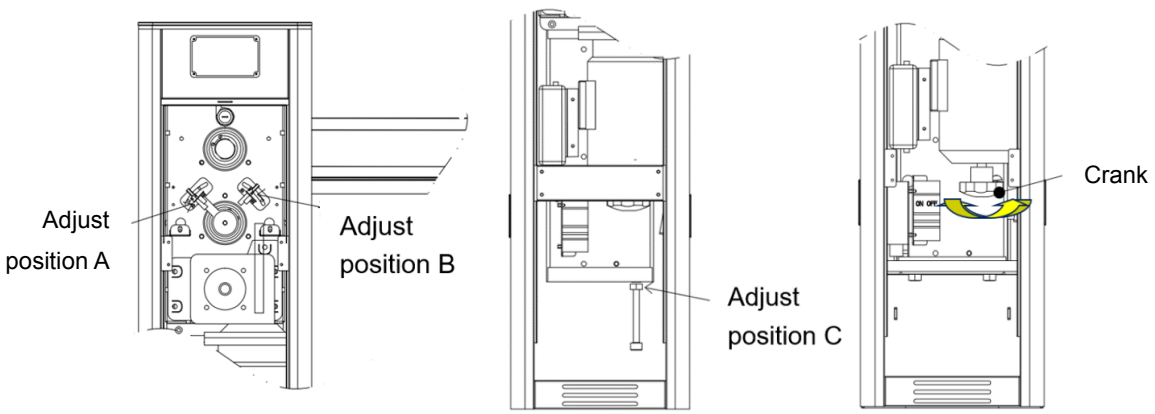

Figure 5-1

4. Additional Functions (Optional)

1) Loop detector

Loop detector in the parking system consists of loop , loop detector， 12V power supplies and control board . The loop buries in the ground 20cm far away from boom . If a vehicle pass , that the loop detector will put a signal to the control boards and then the parking barrier will work .The wiring diagram is shown in the figure 6-1.

Civil installation: First create a circular groove with a diameter of one meter on the ground(or a rectangle 1 meter wide and 2 meter long). After embeds 3 bundles of loop detectors in the groove. Finally, covers the groove.

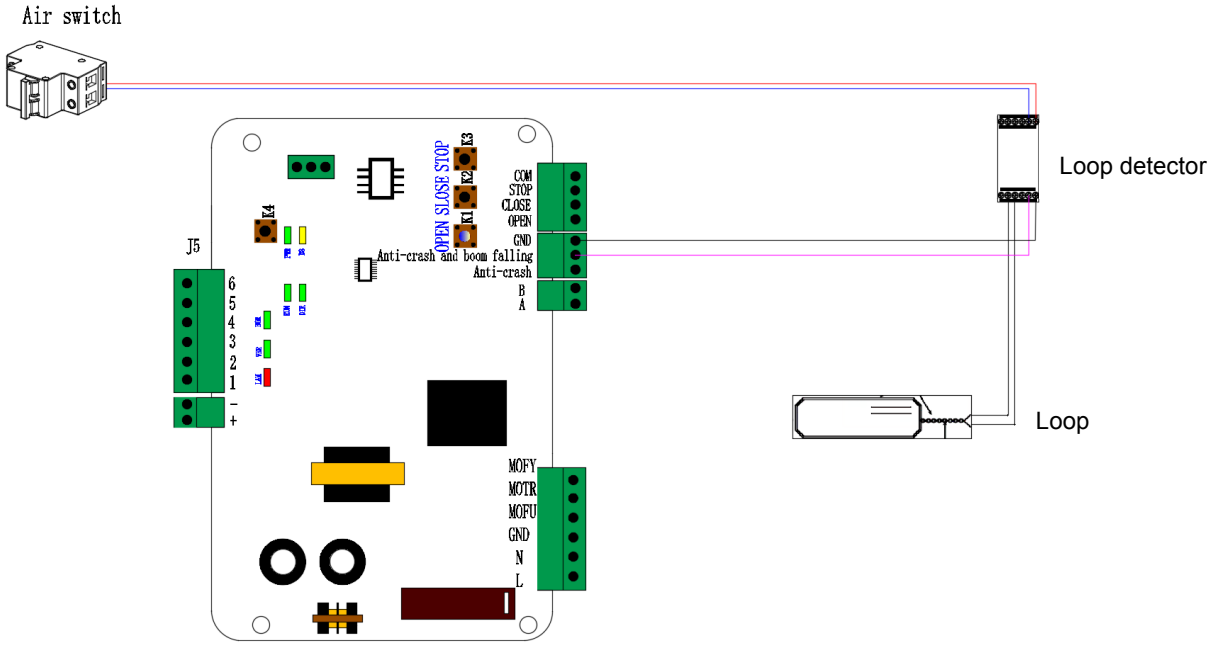

2) Boom illuminator system

Boom illuminator system consists of 12V power supply， extension board and LED strip. The length of LED strip can be 3m, 4m and 5M to match booms with different size. The installation is simple. Just torn the sticker and paste the LED strip on the boom, see figure 6-2A. The wiring diagram is shown in the figure 6-2B.

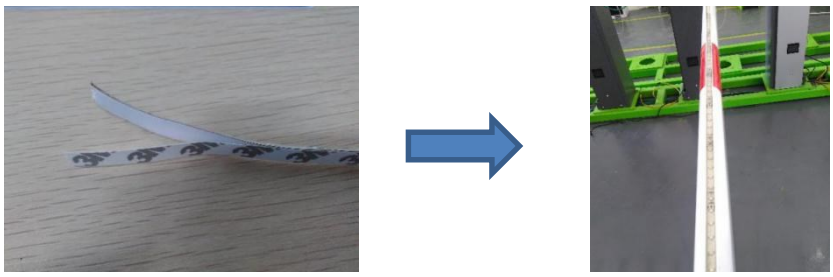

Figure 6-2A

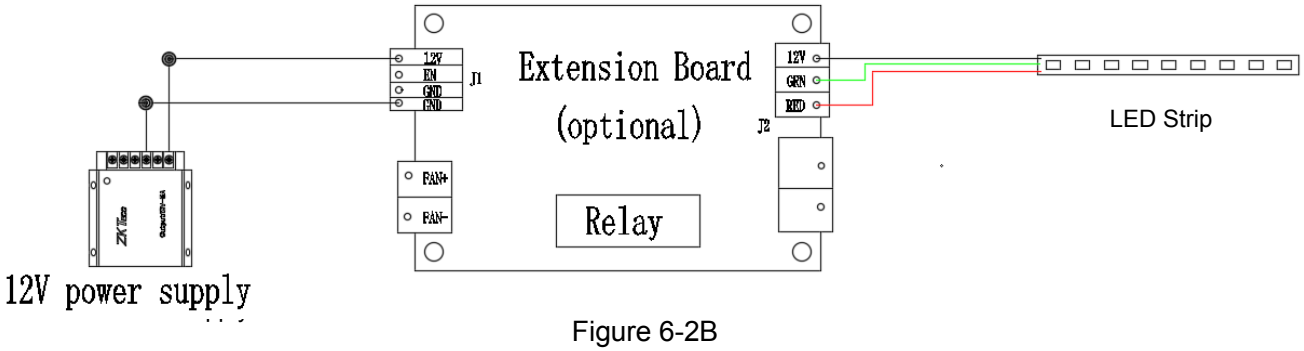

Figure 6-2B

3) Photo cell

When people / vehicle block the infrared launched from photo cell, boom well stop and then lift during drop. After people / vehicle leave, the boom automatically closes. The structure of photo cell is shown in the 6-3A and the wiring diagram is shown in the figure 6-3B.

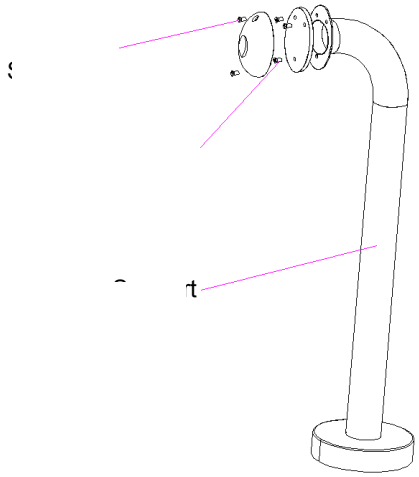

Figure 6-3A

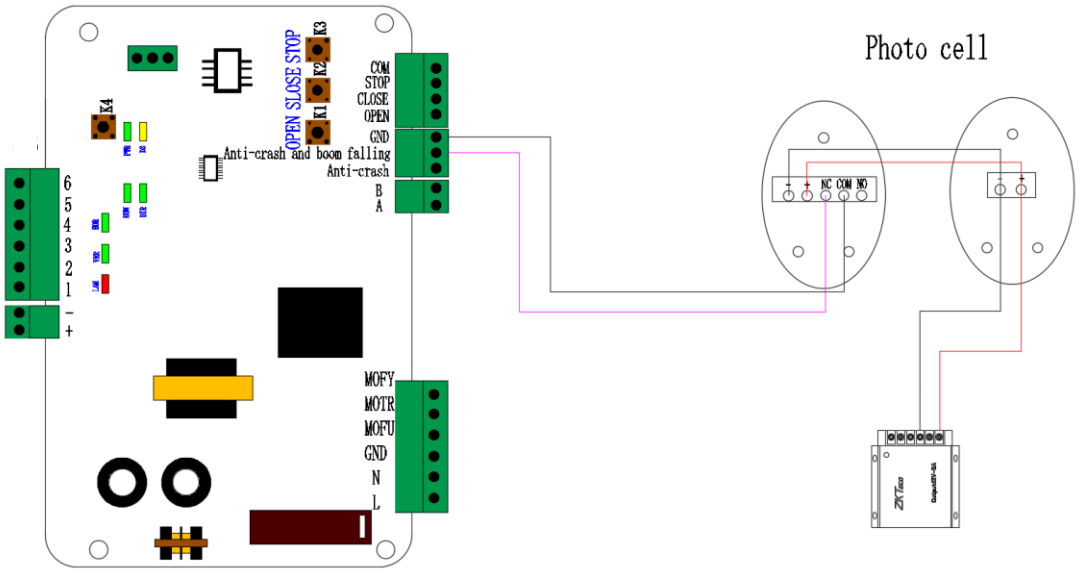

Figure 6-3B

4) Heater system

Heater system consists of 12V power supplies, extension board and heater. The wiring diagram is shown in the figure 6-4.

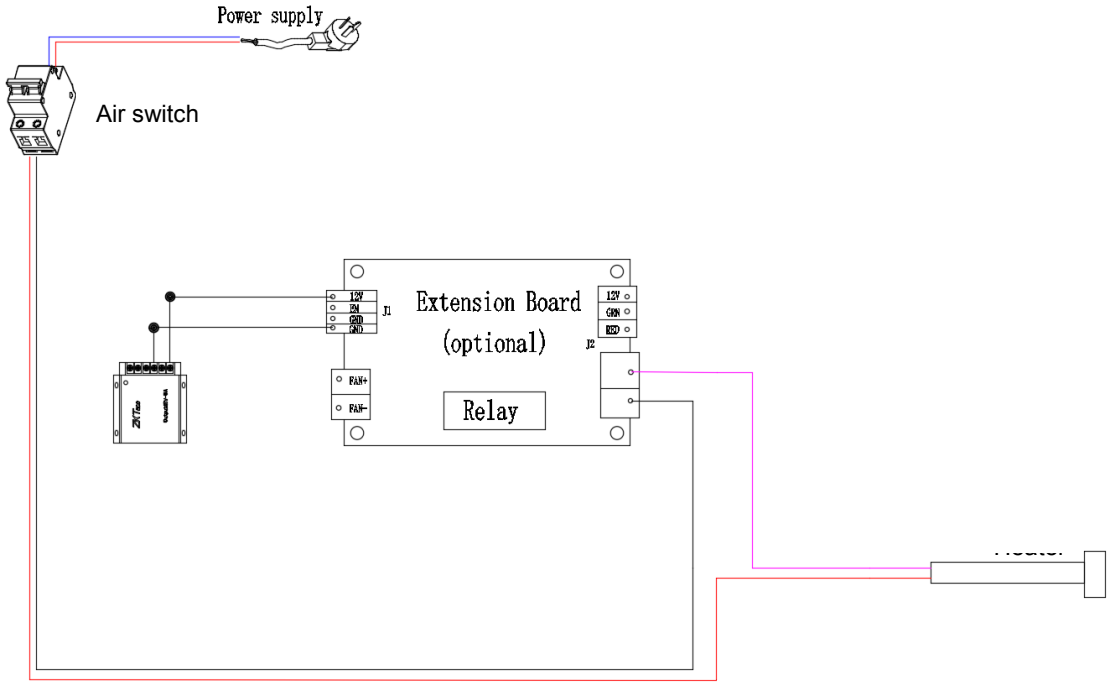

Figure 6-4

5) Cooling system

Cooling system consists of 12V power supplies, extension board and fan. The installation of fan is shown in the 6-5A and the wiring diagram is shown in the figure 6-5B.

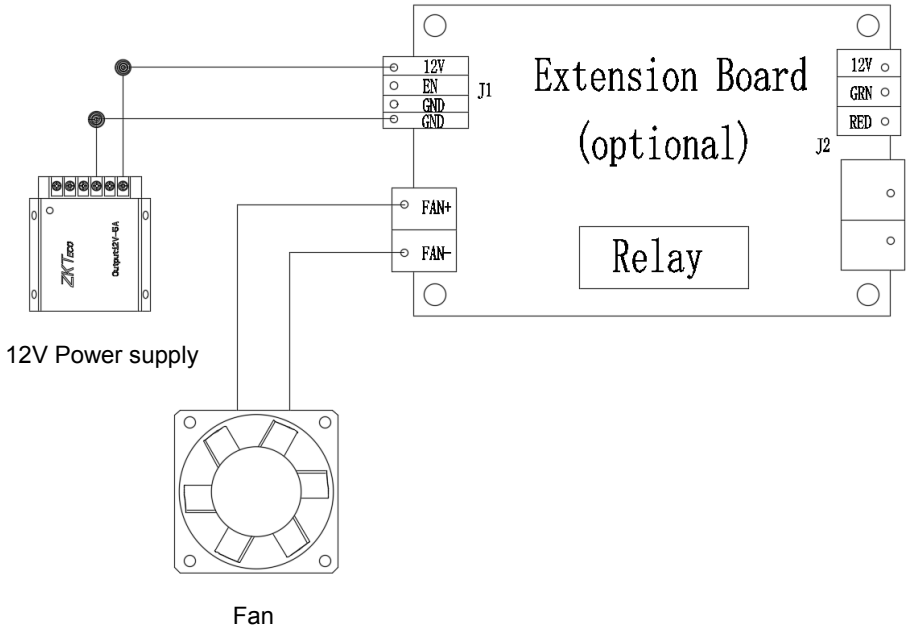

Figure 6-5A

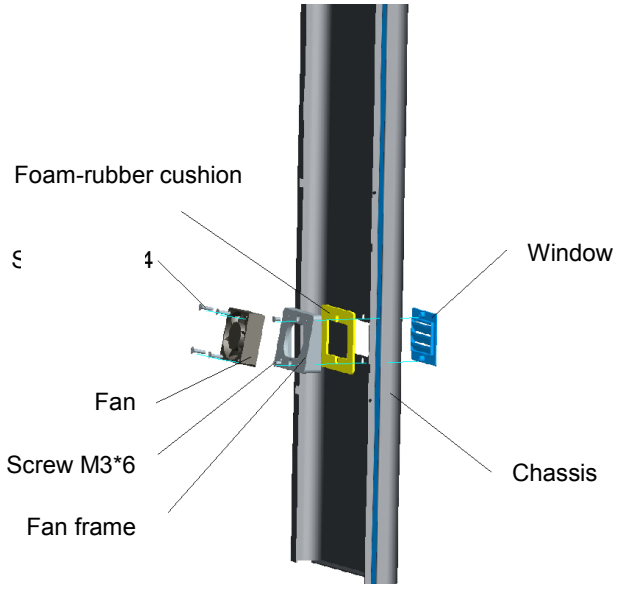

Figure 6-5B

6) Siren

Siren requires 12V power supplies. User just needs to place the siren on top of chassis after wiring and it would be adsorbed by permanent magnets.The wiring diagram is shown in the figure 6-6.

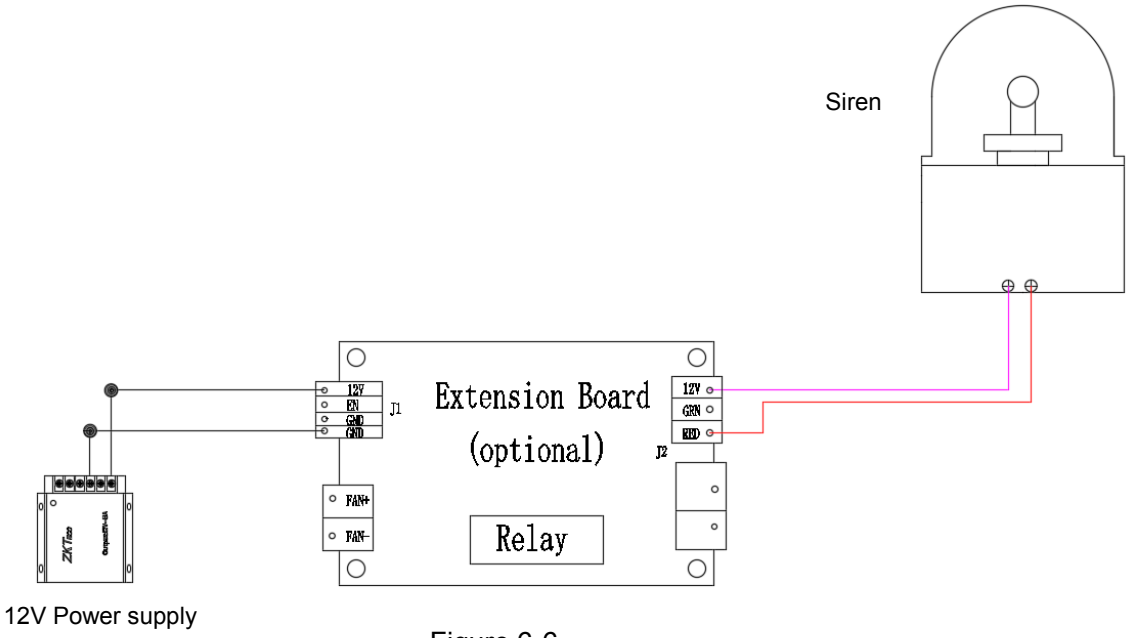

Figure 6-6