PB1000 User Manual

Version: 2.0 Date: May, 2017

Contents

Chapter 1 Overview 1
1.1 Appearance and Dimensions 1
1.2 Components inside the cabinet 2
1.3 Working Principles 3
1.4 Specification Parameters of Product Series 3
Chapter 2 Product Installation 4
2.1 Installation Precautions 4
2.2 Cable Embedding 4
2.3 Cabinet Installation 4
2.4 Boom Installation 5
2.5 System Diagram 7
2.6 Wiring Diagram of the Push Button Station 8
Chapter 3 Troubleshoot 9
Chapter 4 Optional Functions 10
4.1 Loop Detector 10
4.2 Boom Illuminator System 10
4.3 Photo Cell 11
4.4 Cooling System 12
4.5 Siren 12
Chapter 5 Device Maintenance 14
Appendix Wiring Diagram 15

Chapter 1 Overview

1.1 Appearance and Dimensions

PB1000 series use the gray painted cabinet. It can be equipped with different types of straight booms. Standard configuration of PB1030 and PB1060 include expansion boom. Length of expansion boom can be up to 800mm. Dimensions are shown in the following figures.

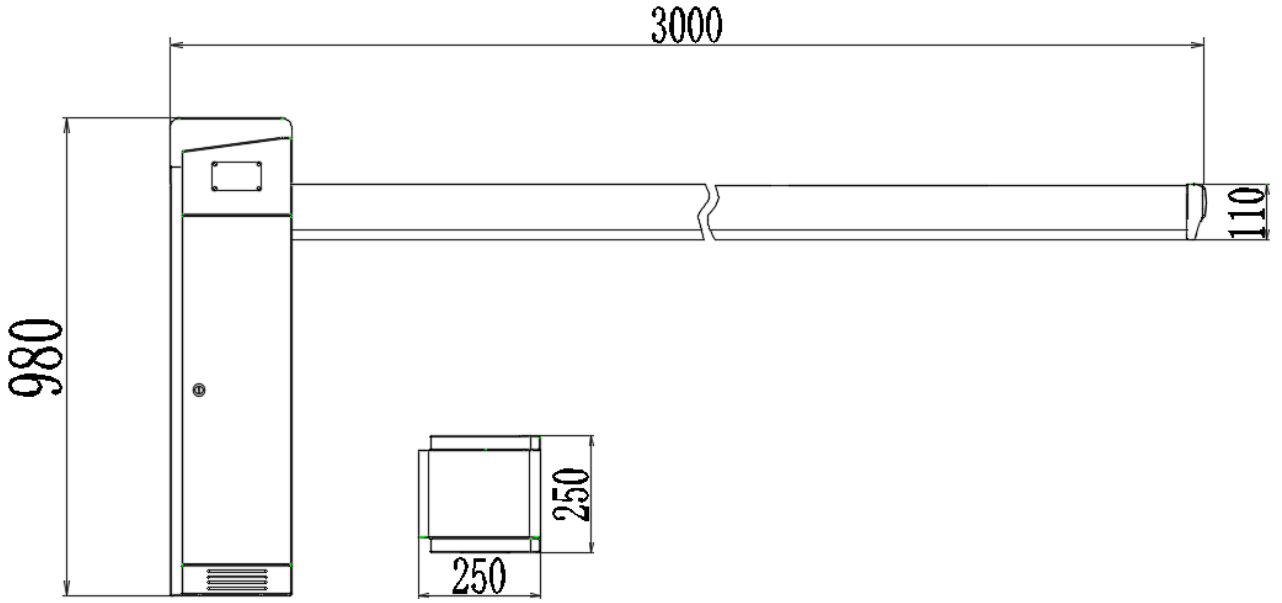

Figure 1-1A Dimensions of the PB1010

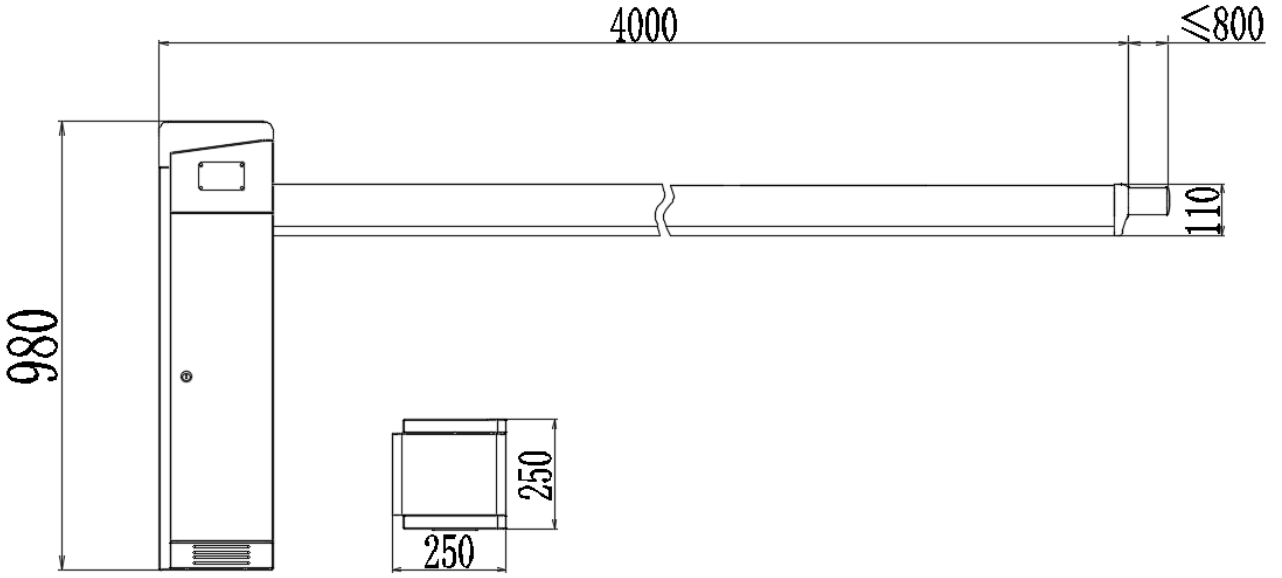

Figure 1-1B Dimensions of the PB1030

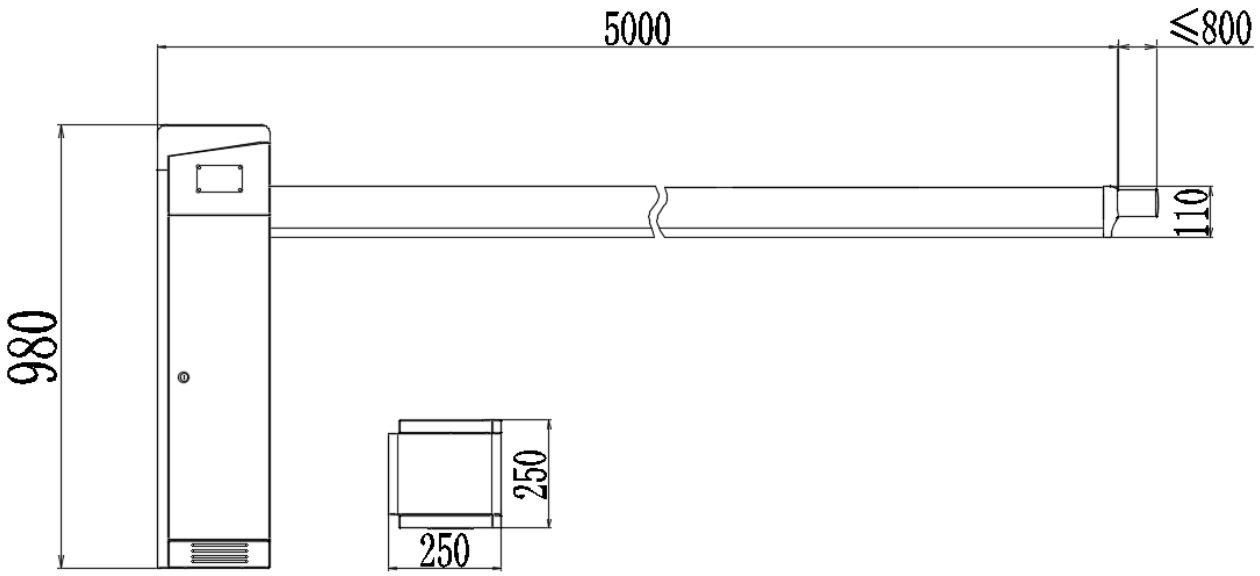

Figure 1-1C Dimensions of the PB1060

1.2 Components inside the cabinet

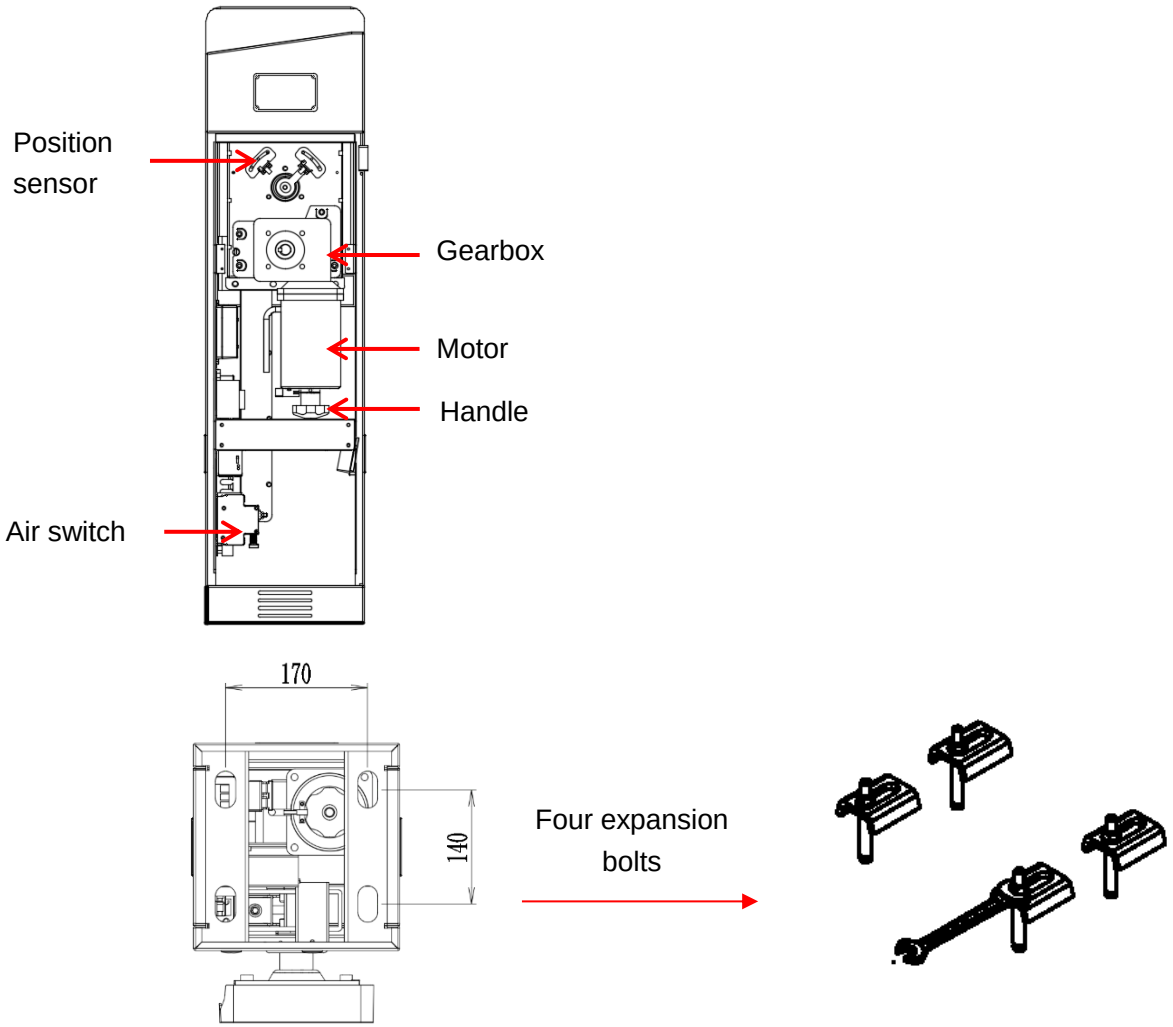

Figure 1-2 Components inside the Chassis

1.3 Working Principles

Power subsystem: Motor and gearbox provide power for the whole system.

Speed reduction subsystem: The speed reduction system control the lifting and falling speed of the boom. It makes the boom slow down when the boom stop movement.

Spring balance subsystem: A compression spring provides balance for the weight of the boom to keep the boom horizontal.

Electric control subsystem: The electric control subsystem consists of control board and position sensor.

1.4 Specification Parameters of Product Series

Appearance	Model	Boom Type	Standard Boom Length	Lifting/ Falling Speed	Fastening Mode	Note
Gray appearance series	PB1010L	Straight boom	3 m	1.8s	Cabinet on the left	The 3M standard configuration do not include the expansion boom. **The device has 220V and 110V two different types.**
	PB1010R	Straight boom	3 m	1.8s	Cabinet on the right	
	PB1030L	Straight boom	4 m（the expansion boom can be extended to 4.8 m）	3s	Cabinet on the left	
	PB1030R	Straight boom	4 m（the expansion boom can be extended to 4.8 m）	3s	Cabinet on the right	
	PB1060L	Straight boom	5 m（the expansion boom can be extended to 5.8 m）	6s	Cabinet on the left	
	PB1060R	Straight boom	5 m（the expansion boom can be extended to 5.8 m）	6s	Cabinet on the right	

Chapter 2 Product Installation

2.1 Installation Precautions

1) Install the parking barrier on a level ground. If the ground is not solid and level, a cement base is needed before installation.
2) The boom can be cut, but can't be increased. After cutting the boom length, the spring balance needs to be set again to achieve new balance. One screw on the bottom of the spring is designed for adjusting new balance.
3) Don't change the wire connection inside when power on.
4) The GND should be connected to the cabinet for secure protection.

2.2 Cable Embedding

1) Prepare φ25 protective sleeve and cable in advance.
2) Route cables to be connected through protective sleeves.
3) Use a tool to open a cable tray on the ground, see figure 2-2.

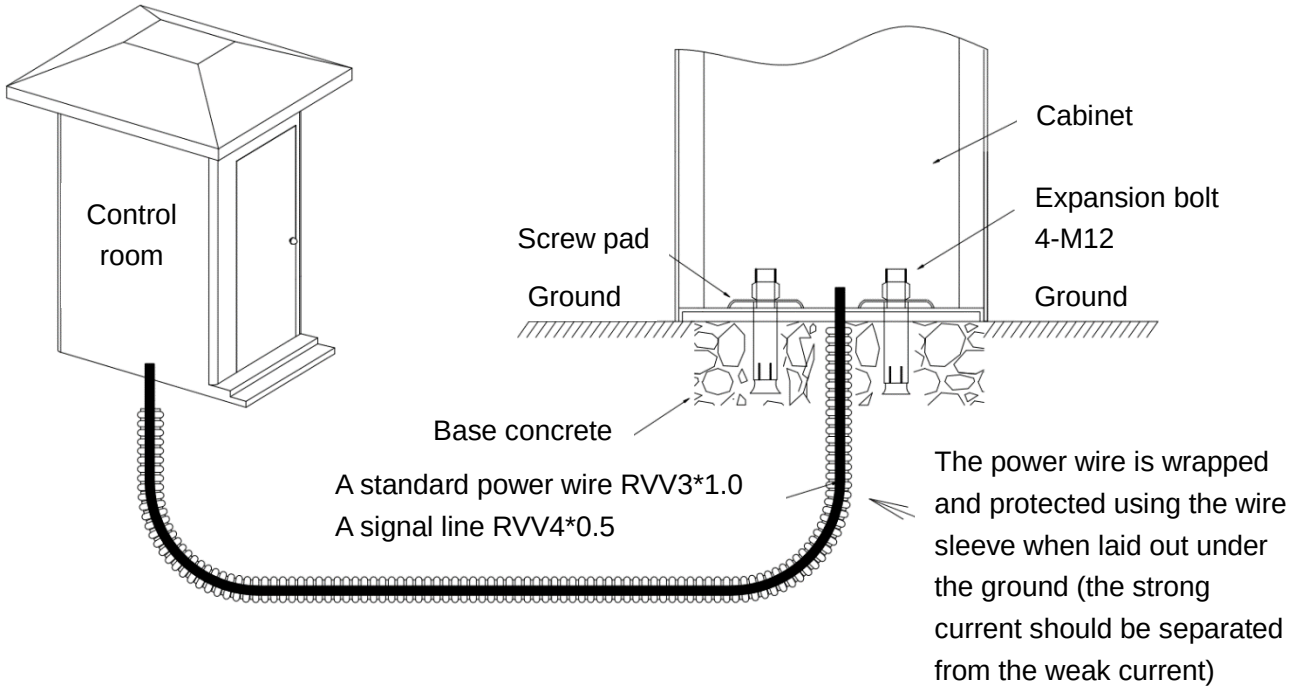

Figure 2-2 Cable embedding

2.3 Cabinet Installation

Installation Procedure

1) Use Bolt Holes Dimensioning to mark the installation position of the cabinet, as shown in Figure 2-3A.
2) Drive four expansion bolts into the Bolt Holes Dimensioning, as shown in Figure 2-3B.
3) Open the access door and install the parking barrier, as shown in Figure 2-3C.

4) Install screw pads and use a wrench to tighten nuts, as shown in Figure 2-3D.
5) Close the access door.

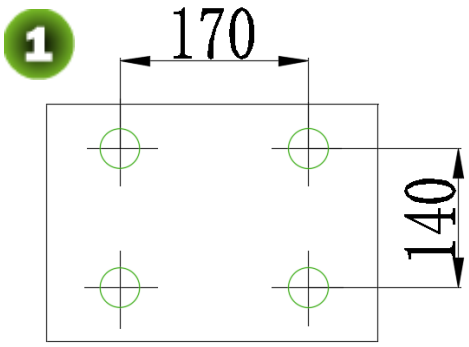

Figure 2-3A

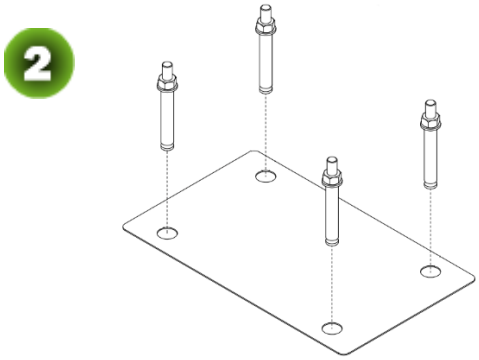

Figure 2-3B

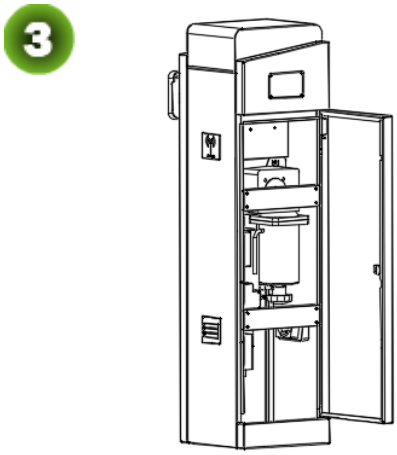

Figure 2-3C

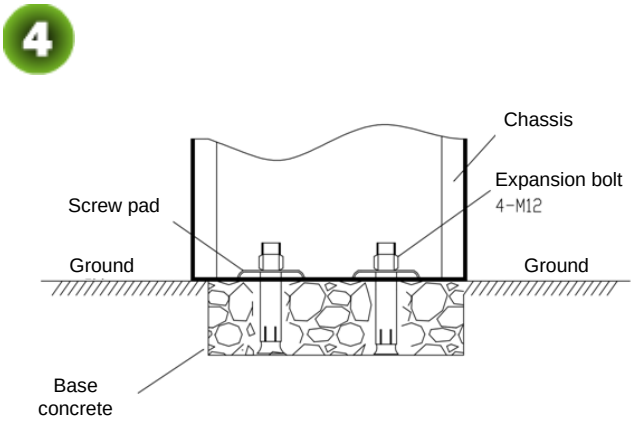

Figure 2-3D

2.4 Boom Installation

Boom Installation Procedure

1) Take out booms.
2) Add glue onto the connection part of the boom, fix the two parts together, as shown in Figure 2-4A.
3) Remove the protection cover on the connection part, as shown in Figure 2-4B.
4) Adjust the length of the expansion boom (only for 4M and 5M device), and fasten the screw, as shown in Figure 2-4C.
5) Install decorative cap on the expansion boom, as shown in Figure 2-4D.
6) Install the anti-crash strip, as shown in Figure 2-4E.
7) Put the boom on the ground for 30 minutes, let the glue be solid, then mount it on the cabinet, as shown in Figure 2-4F.

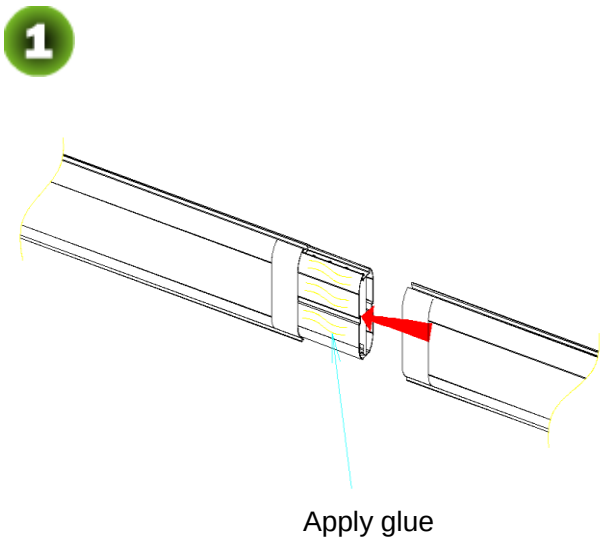

Figure 2-4A Applying Glue

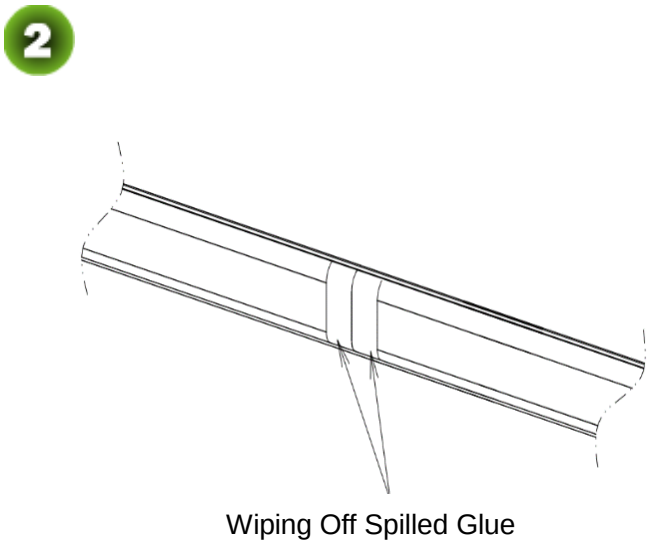

Figure 2-4B Wiping Off Spilled Glue

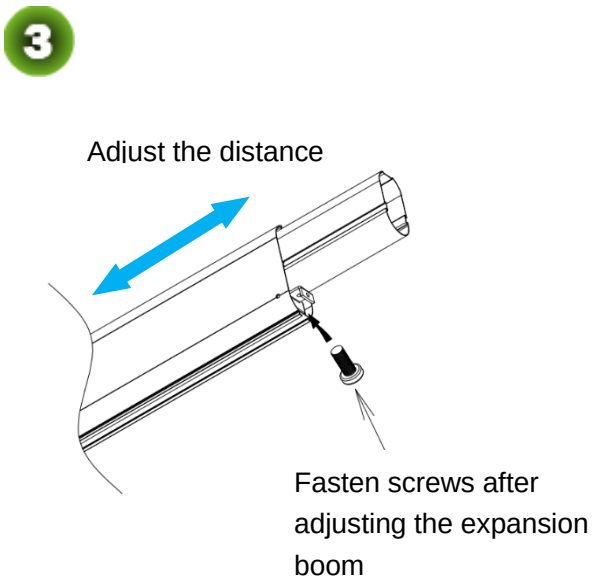

Figure 2-4C

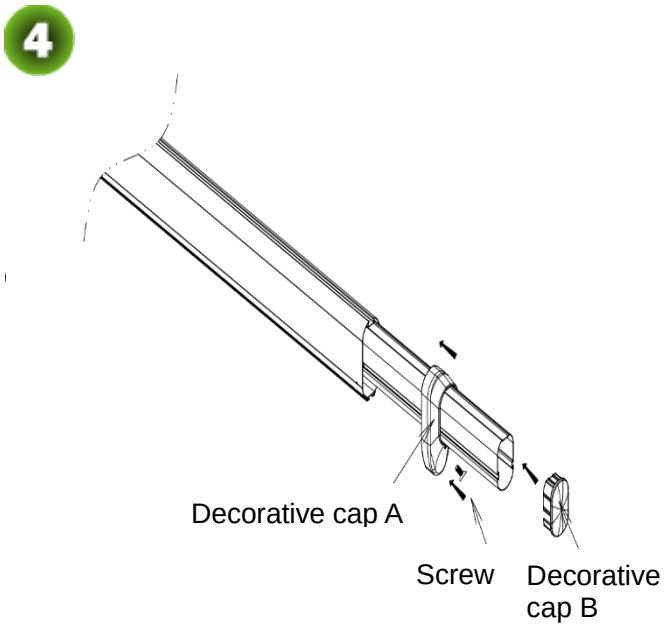

Figure 2-4D

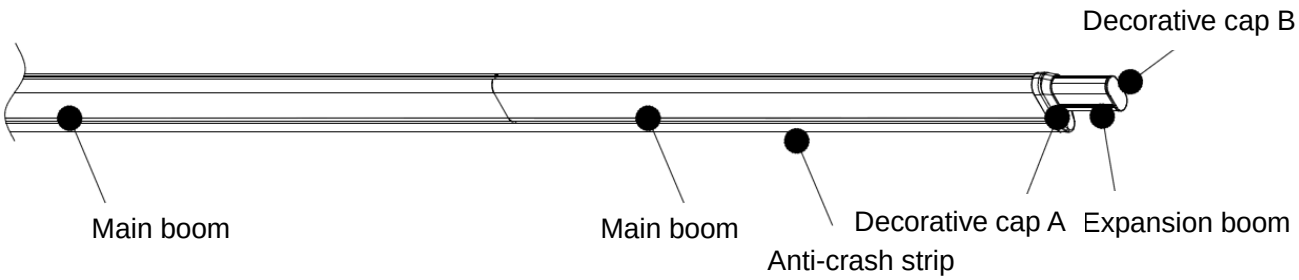

Figure 2-4E Appearance of the Straight Boom

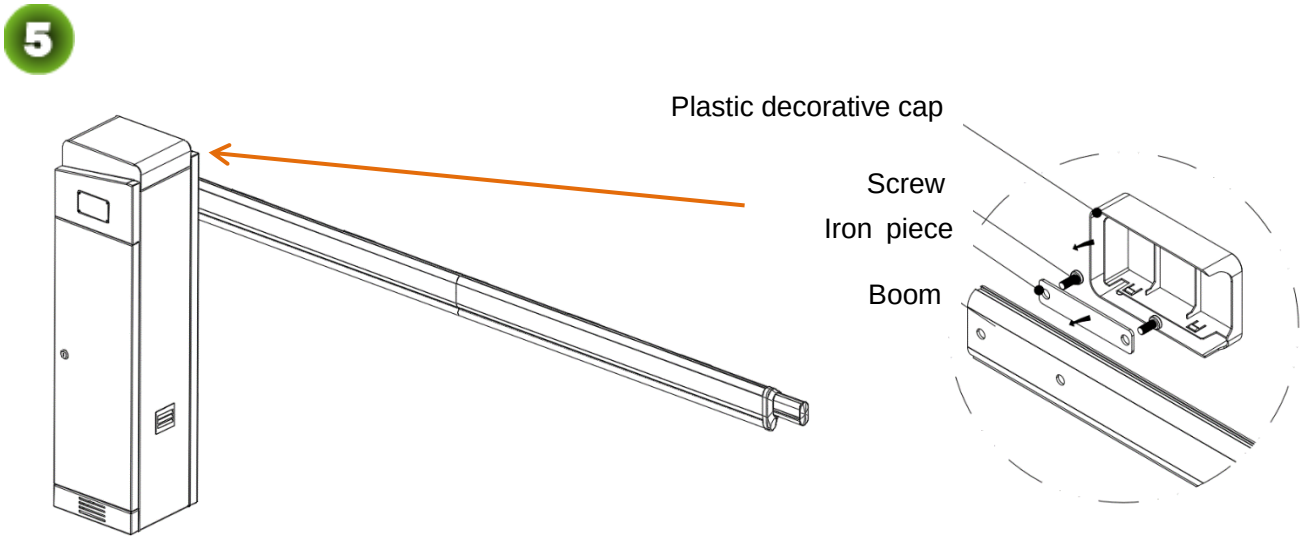

Figure 2-4F Installing the Boom to the Chassis

2.5 System Diagram

Installation Diagram for the Parking barrier and Wall.
The distance between the chassis and the wall should be greater than or equal to 100 mm.
The distance between the boom and the wall should be greater than or equal to 100 mm.

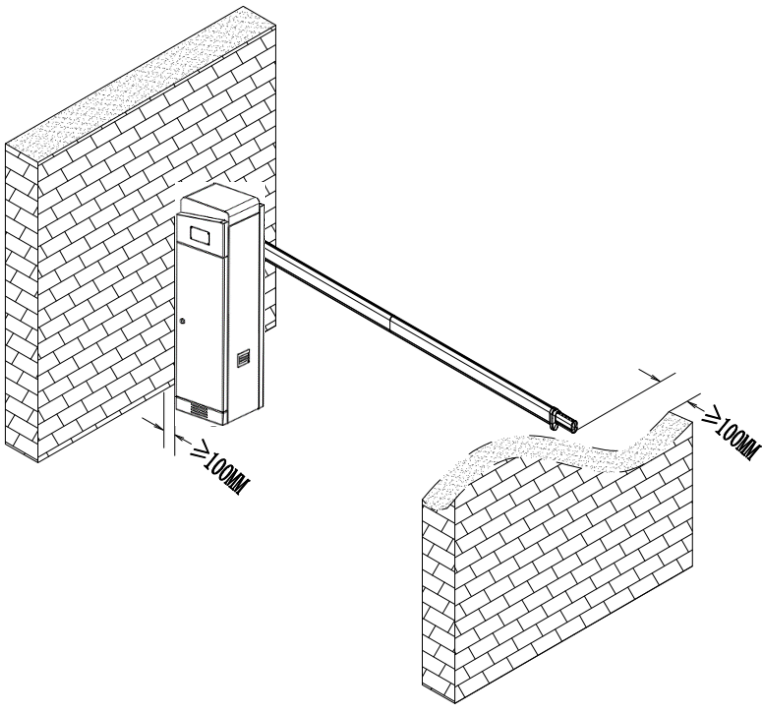

System Diagram

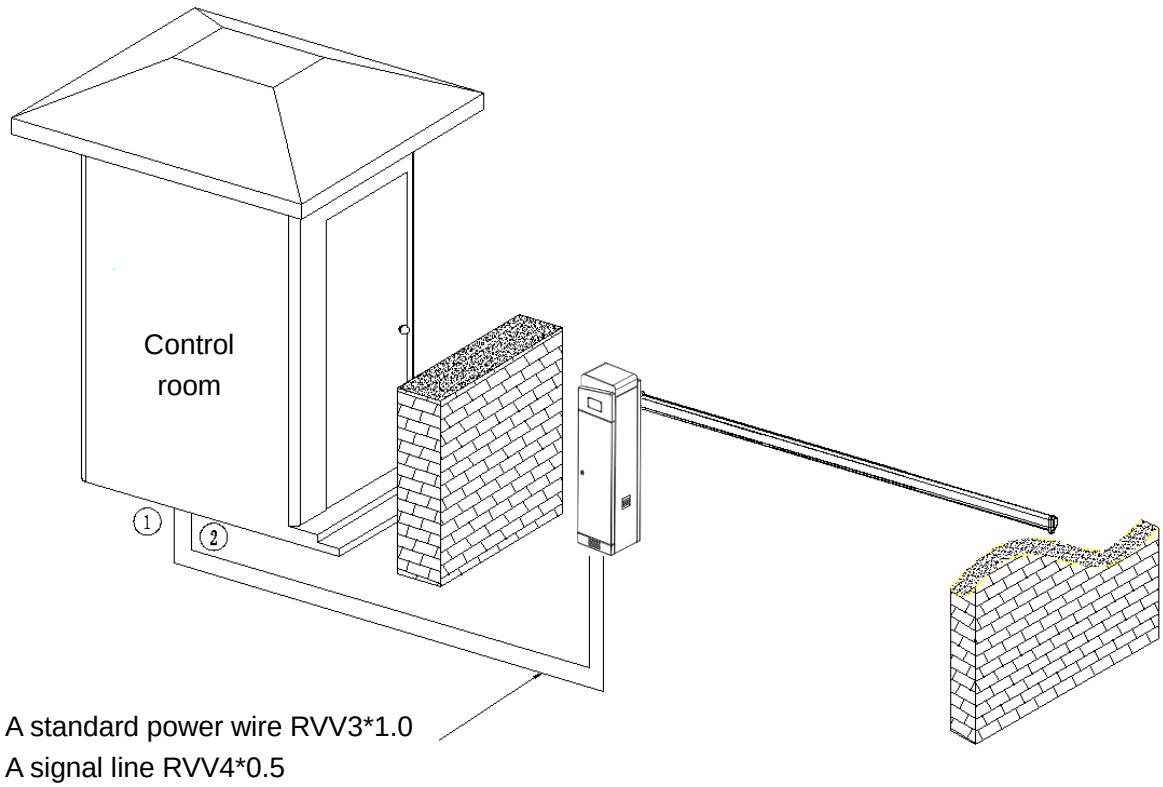

2.6 Wiring Diagram of the Push Button Station

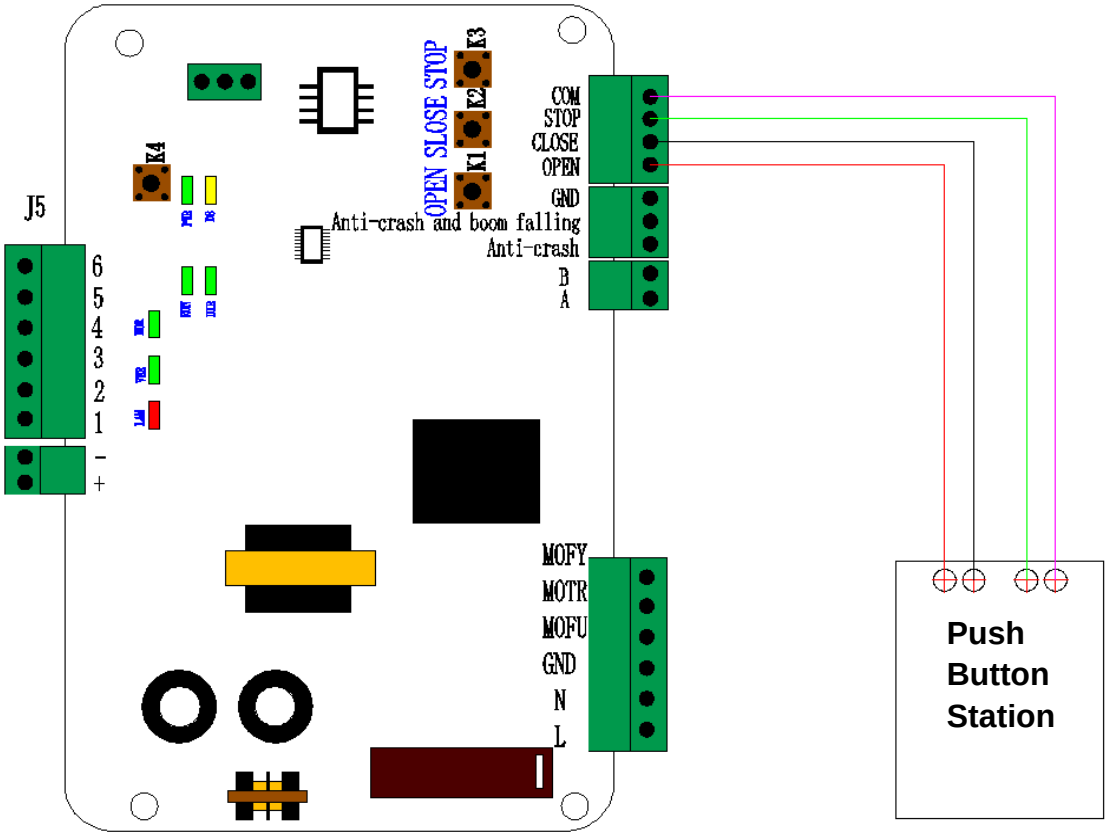

Chapter 3 Troubleshoot

1) If the boom fails to fall into a level position, adjust position A; if the boom fails to be lifted upright, adjust position B. See Figure 3-2A.

2) If the boom shakes during falling or lifting, adjust position C. The shaking that occurs during lifting is caused by the overlarge spring force. In this case, loosen the screws. If the boom shakes during falling, tighten the screws. See Figure 3-2B.

3) Use the motor handle to lift the boom in the case of a power failure, See Figure 3-2C.

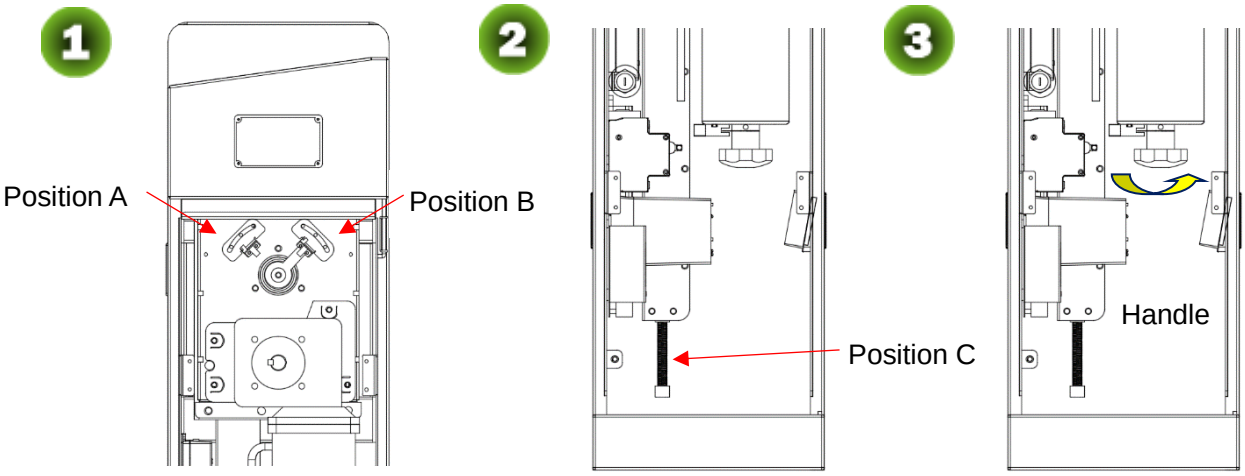

Figure 3-2A Figure 3-2B Figure 3-2C

Chapter 4 Optional Functions

4.1 Loop Detector

Loop detector in the parking system consist of loop, loop detector and control board. The loop is installed under the ground. When loop detect a vehicle, the boom will not fall down, after the vehicle pass, the boom will automatically fall down. The wiring diagram is shown in the figure 4-1.

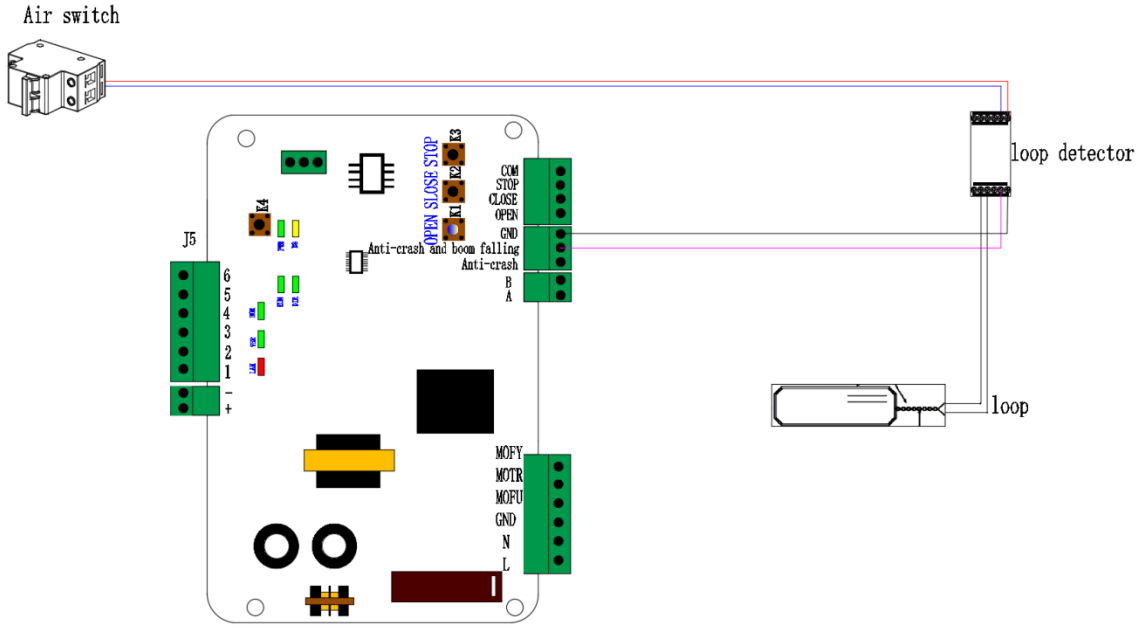

Figure 4-1

4.2 Boom Illuminator System

Boom Illuminator System includes 12V power supply, extension board and LED strip. The length of LED strip can be 3m, 4m and 5M to match booms with different size. Stick the LED strip on the top of the boom, and connect the power. The wiring diagram is shown in the figure 4-2.

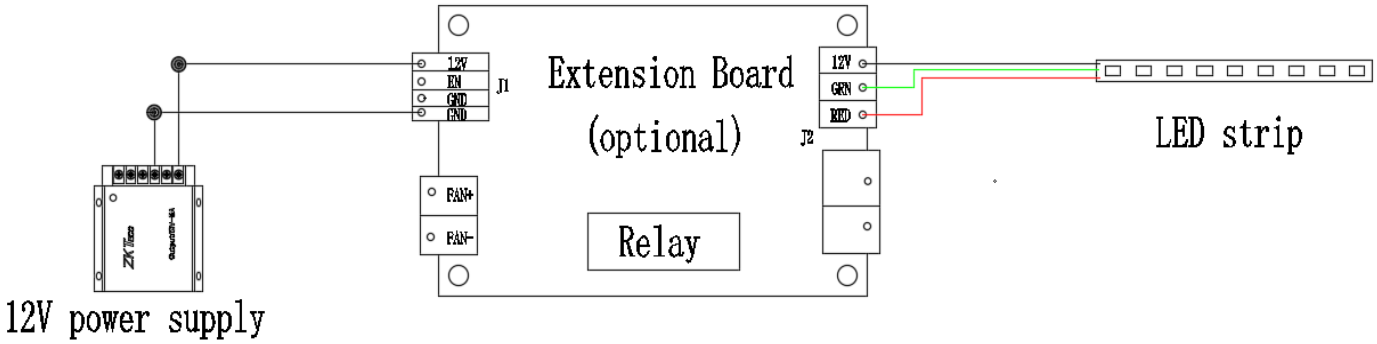

Figure 4-2

4.3 Photo Cell

When photo cell detect a vehicle, the boom will not fall down, after the vehicle pass, the boom will automatically fall down. The structure of photo cell is shown in the 4-3A and the wiring diagram is shown in the figure 4-3B.

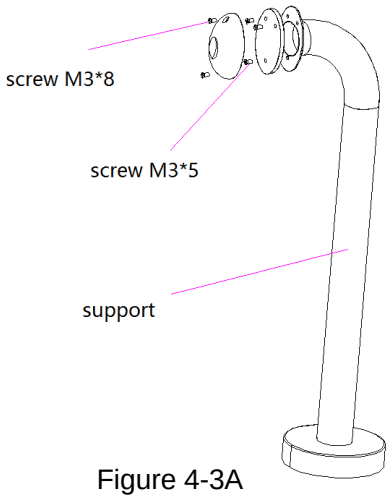

Figure 4-3A

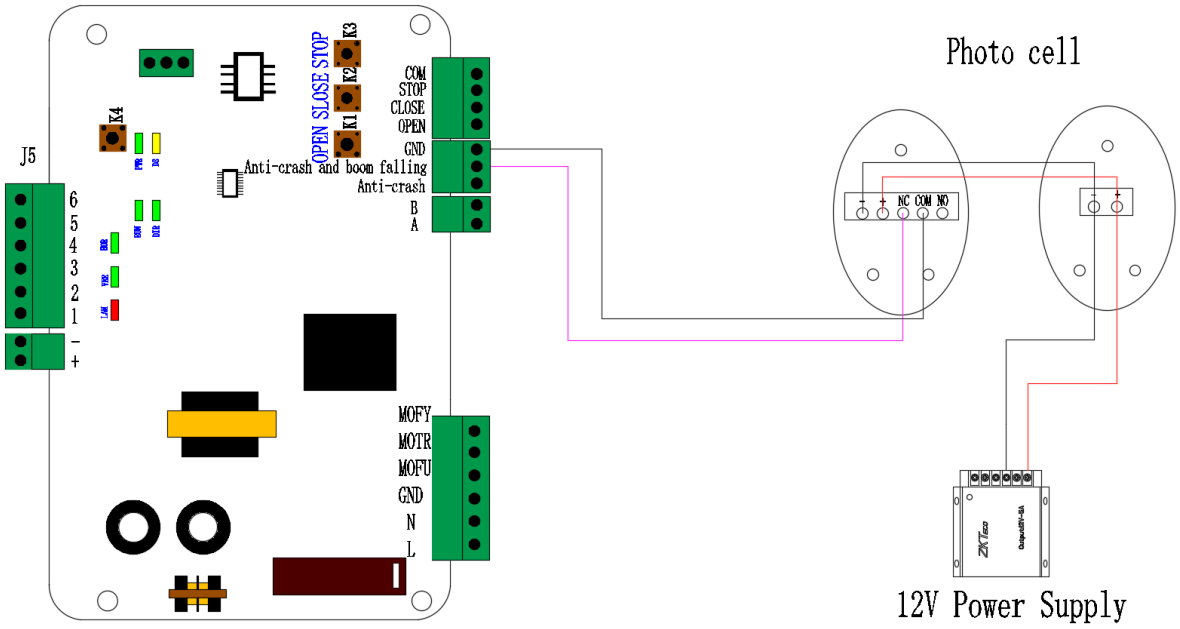

Figure 4-3B

4.4 Cooling System

Cooling system consist of 12V power supply, extension board and fan. The installation of fan is shown in the 4-5A and the wiring diagram is shown in the figure 4-5B.

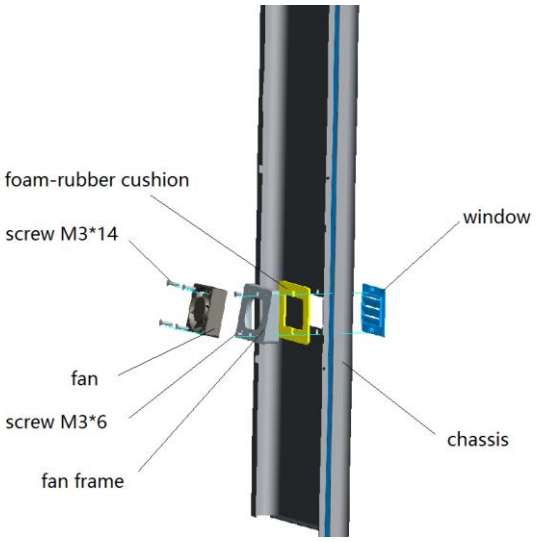

Figure 4-5A

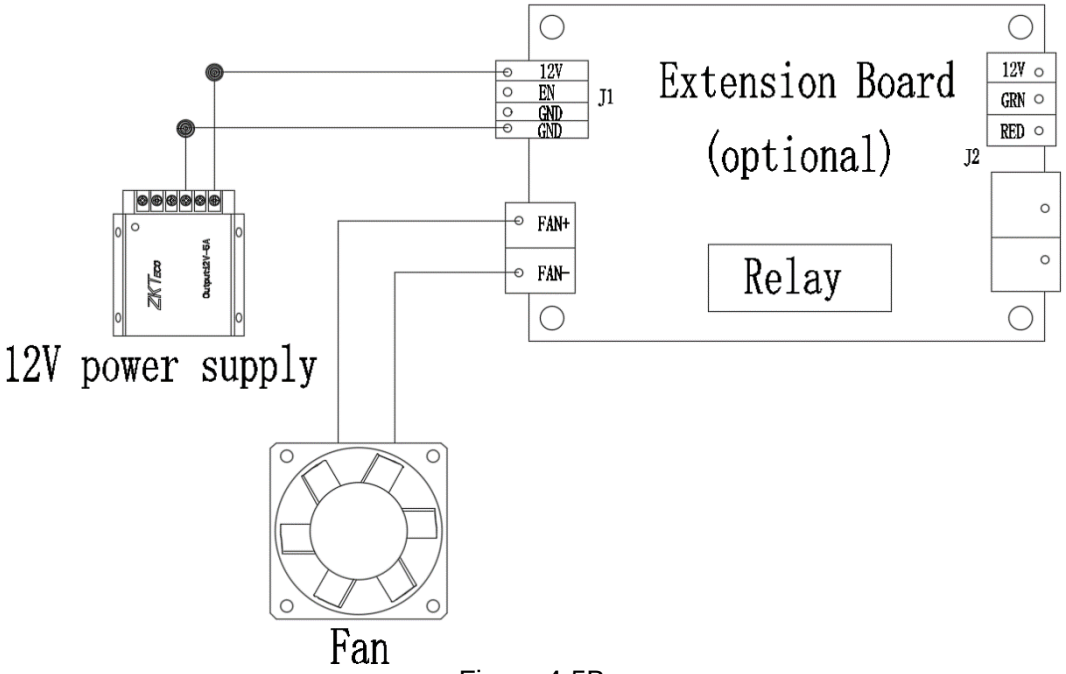

Figure 4-5B

4.5 Siren

Siren requires 12V power supply. User just need to place the siren on the top of chassis after wiring. It would be adsorbed by permanent magnet. The wiring diagram is shown in the figure 4-6.

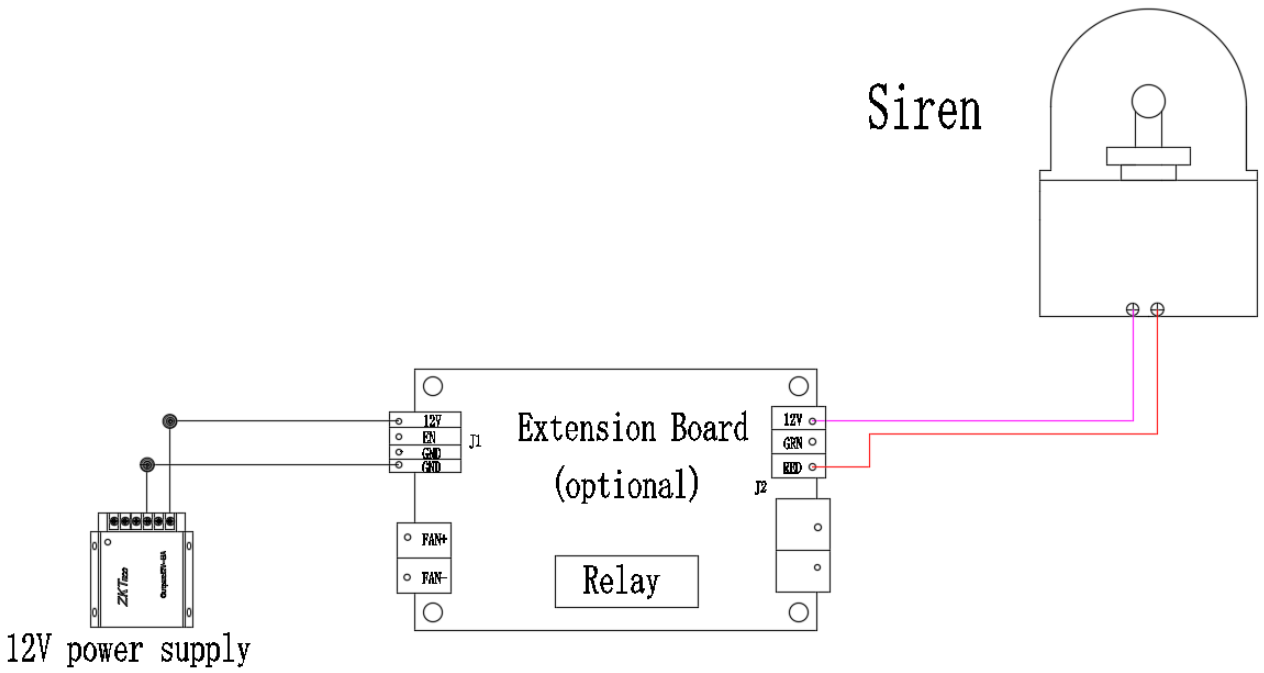
Siren
Extension Board
(optional)
12V
EN
GND
GND
J1
FAN+
FAN-
Relay
12V
GRN
RED
J2
12V power supply

Chapter 5 Device Maintenance

1) Maintain the boom. Fix the reflective sticker.

2) Tighten terminals connector of the device.

3) Clear dust on components inside the cabinet.

Note that technicians should maintain the parking barrier system once a month.

Appendix Wiring Diagram

1) Interface of the Main Control Board

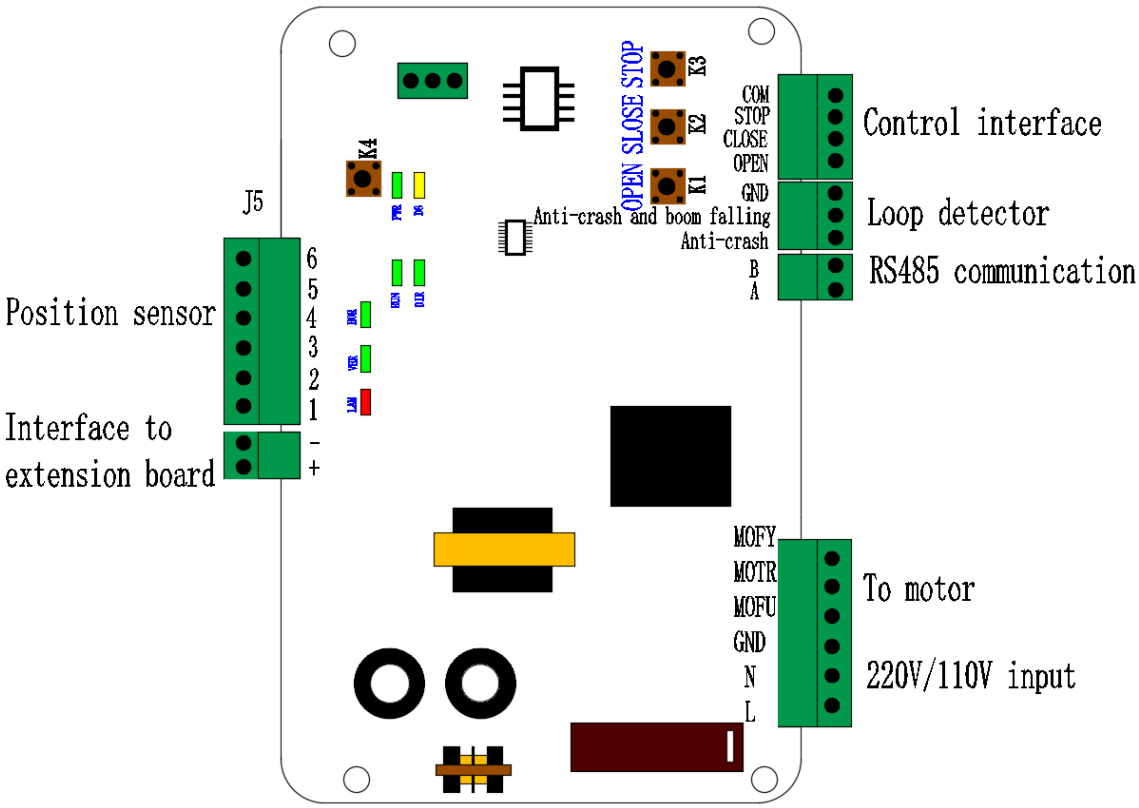

Delete All Transmitter

Press K4 setting button until D8 yellow light flashes. Hold on K4, press stop button on control board until D9 red light flash one time. The operation successes and will delete all the registered transmitters.

Register the transmitter

Press K4 setting button until D8 yellow light flashes. Hold on K4, press any button on transmitter until D9 red light flash one time. Maximum 7 different code transmitters can be registered.

2) Interface of the Extension board

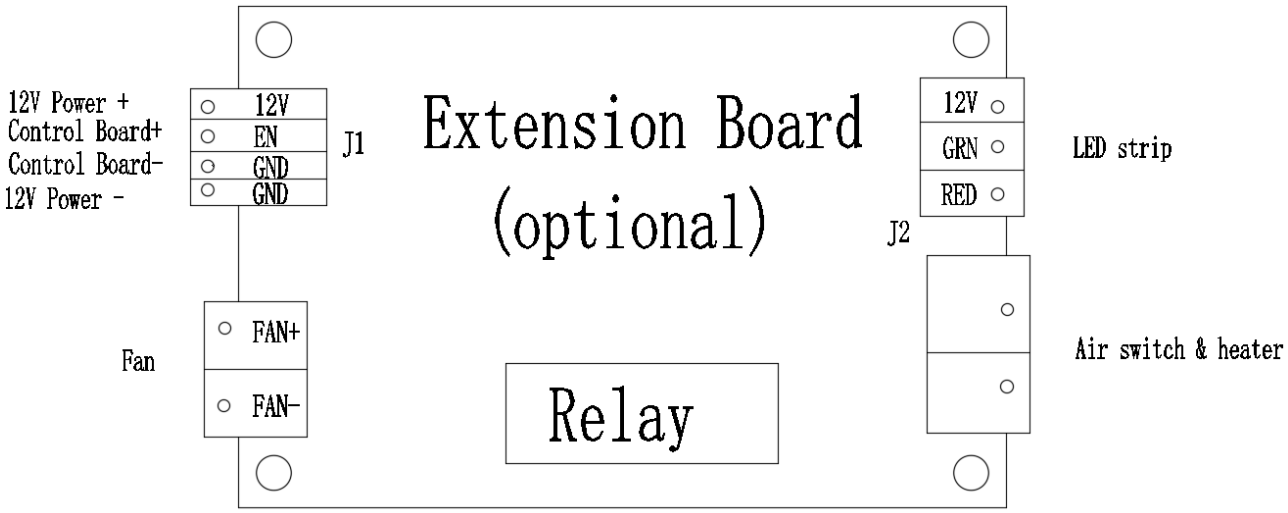

3) Wiring Diagram of the Mains Supply and Motor

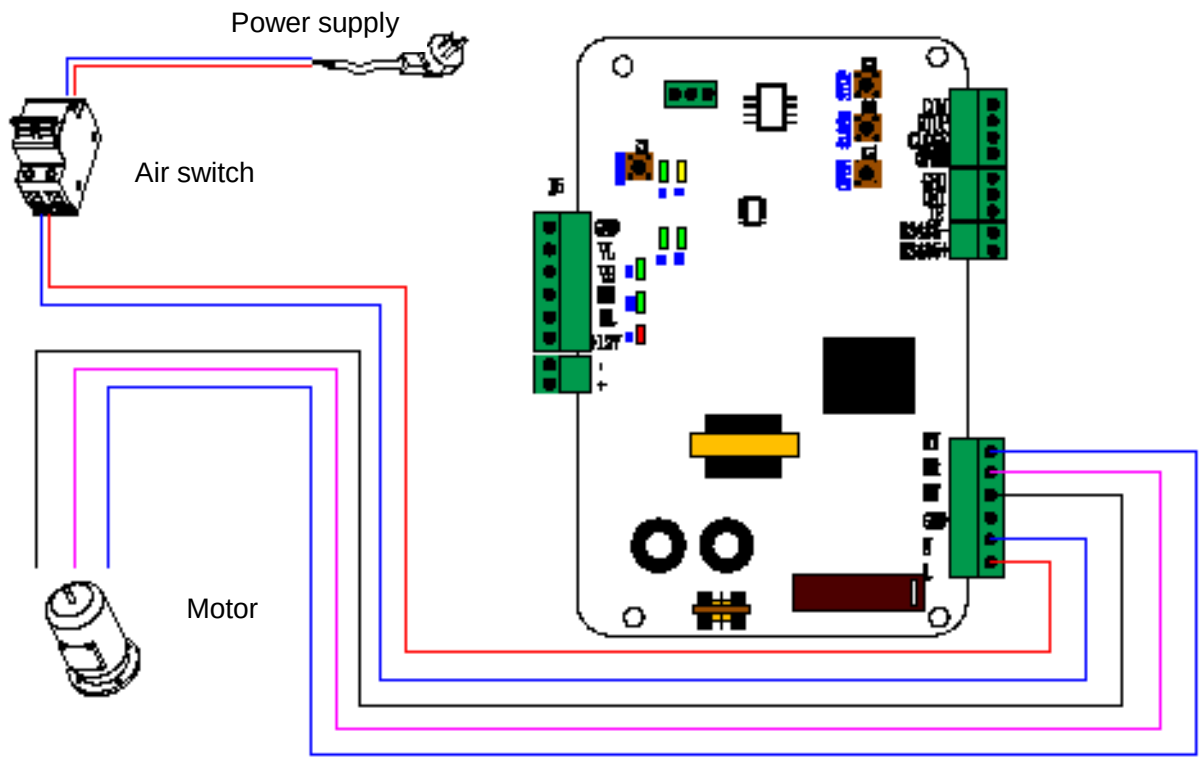
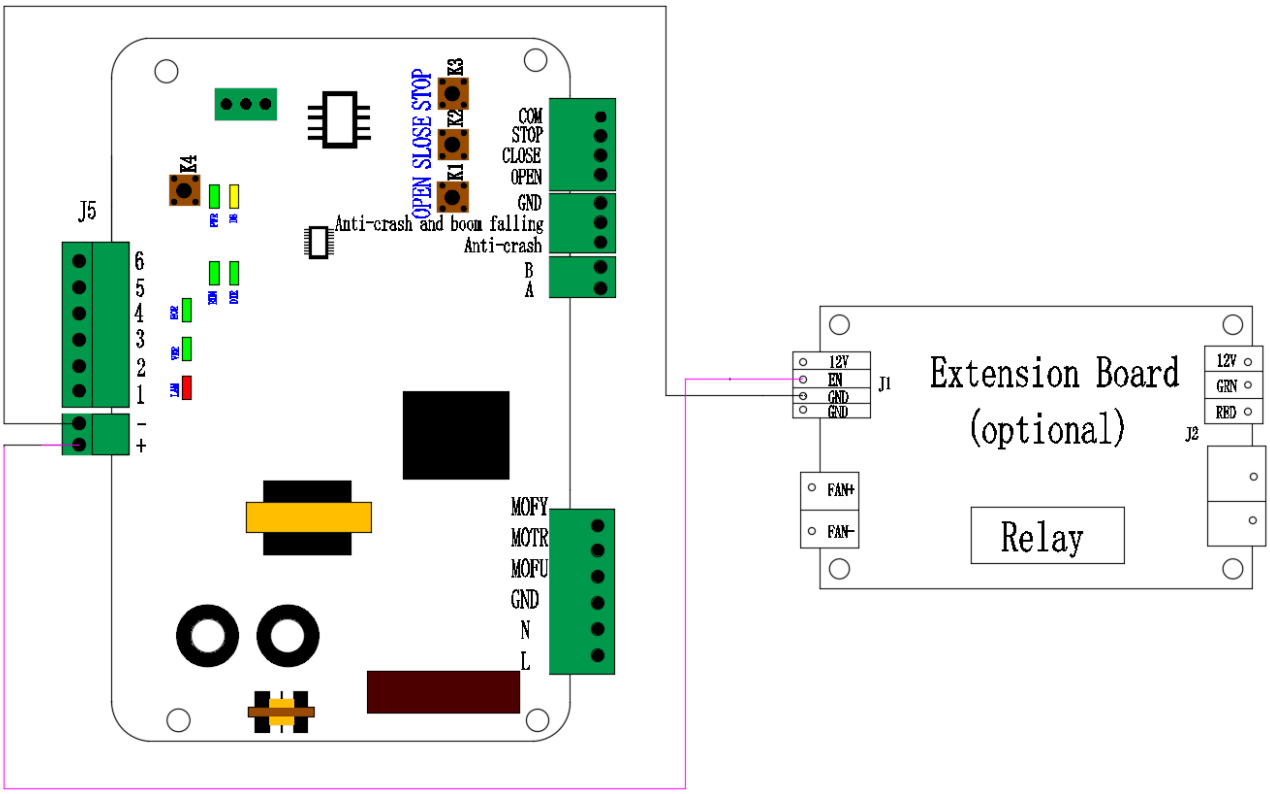
4) Wiring Diagram of the Extension Board and Main Control Board