User Manual

PB3000

Contents

Chapter 1 Overview....1
1.1 Appearance and Dimensions....1
1.2 Components inside the cabinet....2
1.3 Working Principles....3
6M(main boom 3.2m + vice boom 3m....3
Chapter 2 Product Installation....4
2.1 Installation Precautions....4
2.2 Cable Embedding....4
2.3 Cabinet Installation....4
2.4 Boom Installation....5
2.5 System Diagram....7
2.6 Wiring Diagram of the Push Button Station....8
Chapter 3 Troubleshoot....9
Chapter 4 Optional Functions....10
4.1 Loop Detector....10
4.2 Cooling System....11
Chapter 5 Device Maintenance....12
Appendix Wiring Diagram....13

Chapter 1 Overview

1.1 Appearance and Dimensions

PB3000 series are equipped with gray painted cabinets. PB3030 and PB3060 include main and vice boom, PB3010 has one main boom. The dimensions are shown in the following figures.

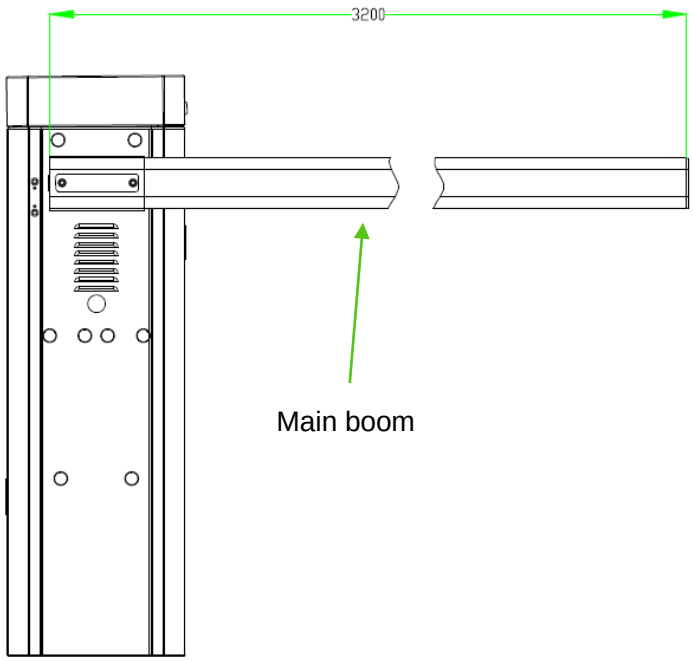

Figure 1-1 the boom length of the PB3010

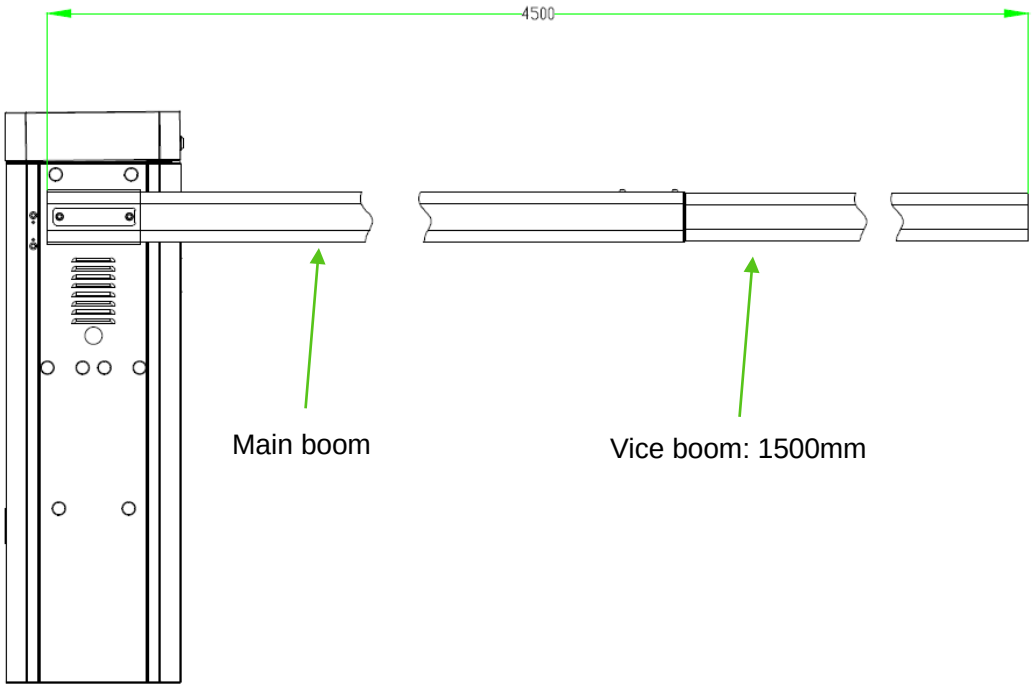

Figure 1-2 the boom length of the PB3030

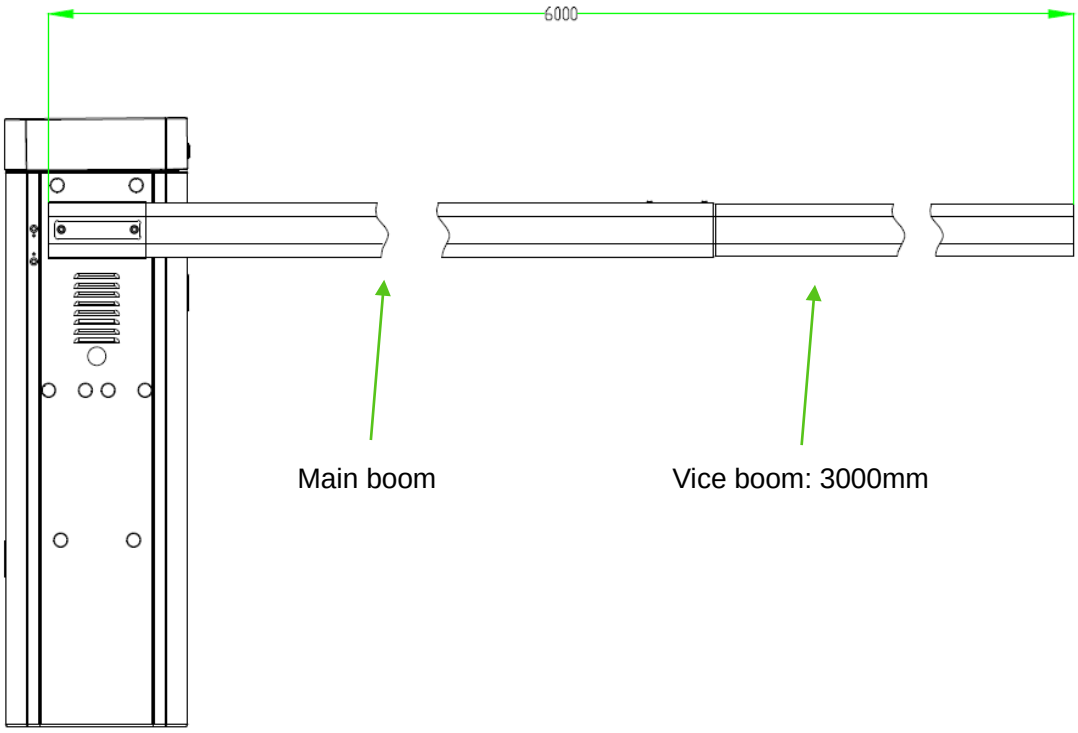

Figure 1-3 the boom length of the PB3060

1.2 Components inside the cabinet

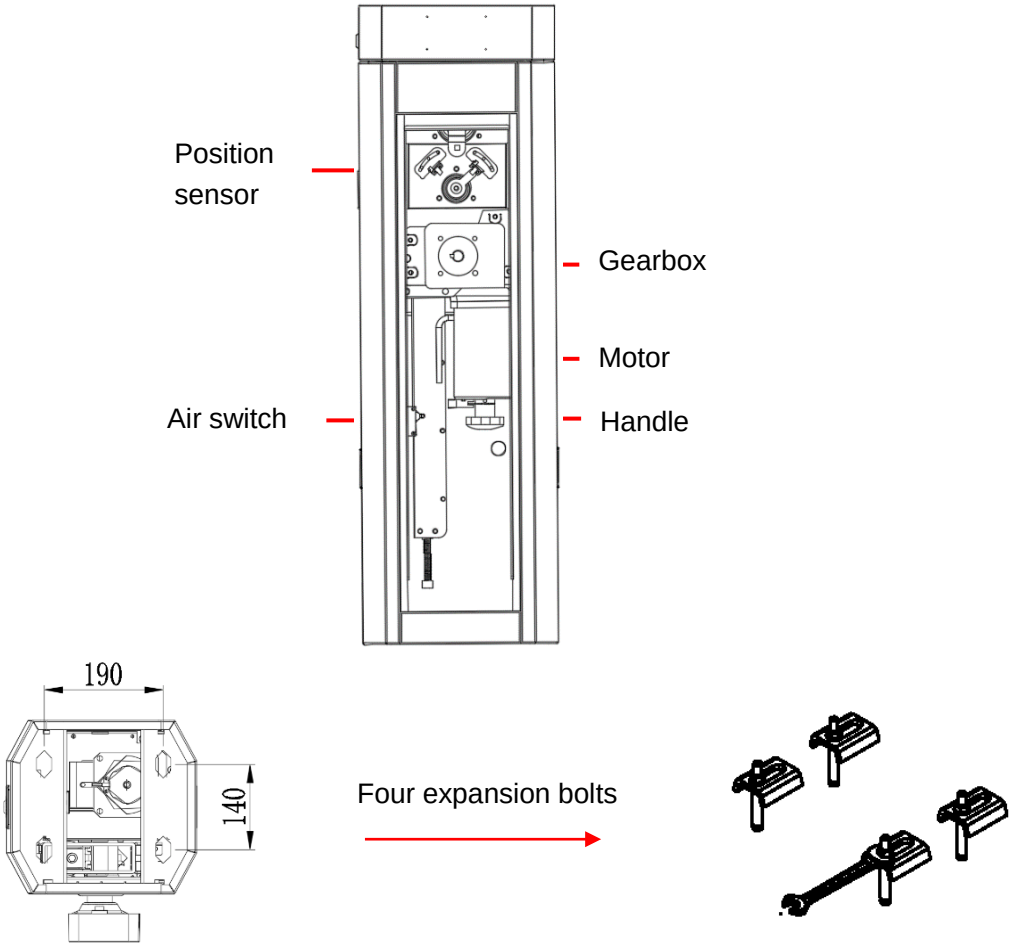

Figure 1-4 Components inside the Chassis

1.3 Working Principles

Power subsystem: The motor and gearbox provide power for the whole system.

Speed reduction subsystem: The speed reduction system controls the lifting and falling speed of the boom. It makes the boom slow down when the boom stops movement.

Spring balance subsystem: The compression spring provides balance for the weight of the boom to keep the boom horizontal.

Electric control subsystem: The electric control subsystem consists of a control board and a position sensor.

1.4 Specification Parameters of Product Series

Appearance	Model	Boom Type	Standard Boom Length	Lifting/ Falling Speed	Fastening Mode	Note
Gray appearance series	PB3010L	Straight boom	3.2 M	1.8s	Cabinet on the left	**There are 200V and 100V types for the device.**
	PB3010R	Straight boom	3.2M	1.8s	Cabinet on the right	
	PB3030L	Straight boom	4.5M(main boom 3.2m + vice boom 1.5m	3s	Cabinet on the left	
	PB3030R	Straight boom	4.5M(main boom 3.2m + vice boom 1.5m	3s	Cabinet on the right	
	PB3060L	Straight boom	6M(main boom 3.2m + vice boom 3m	6s	Cabinet on the left	
	PB3060R	Straight boom	6M(main boom 3.2m + vice boom 3m	6s	Cabinet on the right	

Chapter 2 Product Installation

2.1 Installation Precautions

1) Install the parking barrier on a level ground. If the ground is not solid and level, a cement base is needed before installation.
2) The boom can be cut, but cannot be increased. After cutting the boom length, the spring balance needs to be set again to achieve new balance. One screw on the bottom of the spring is designed for adjusting new balance.
3) Do not change the wire connection inside when power on.
4) The GND should be connected to the cabinet for secure protection.

2.2 Cable Embedding

1) Prepare φ25 protective sleeve and cable in advance.
2) Route cables to be connected through protective sleeves.
3) Use a tool to open a cable tray on the ground, see figure 2-1.

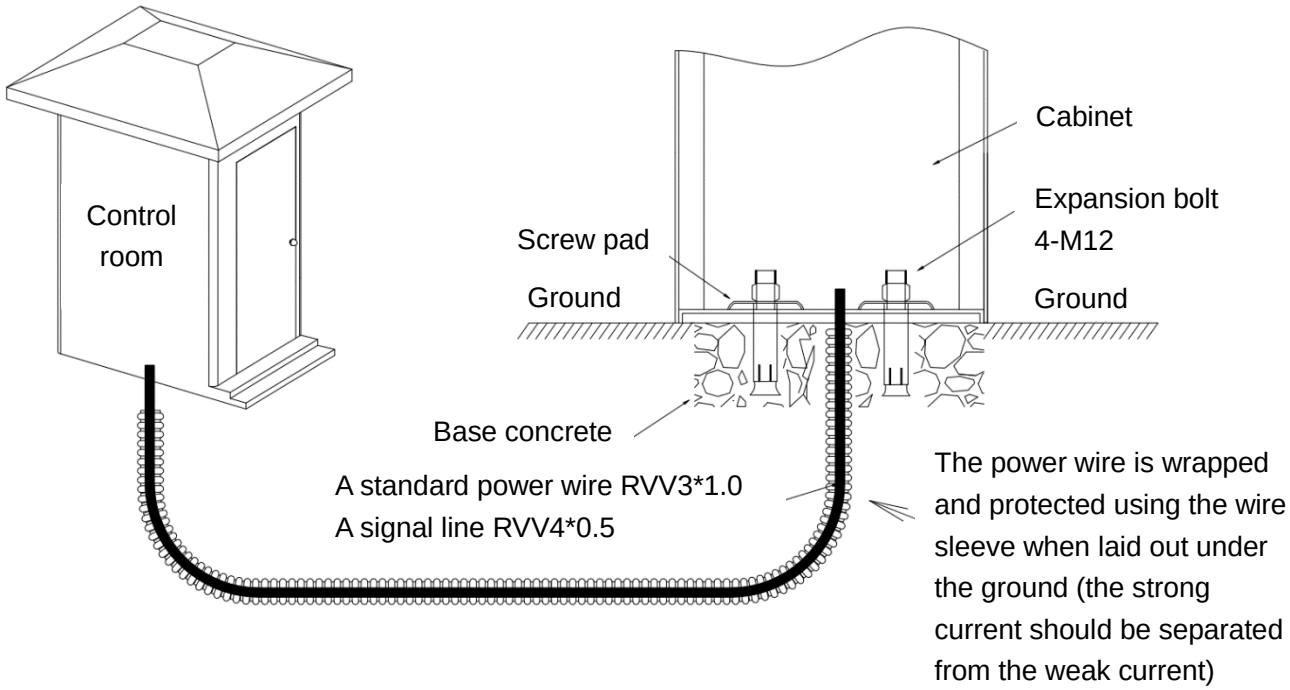

Figure 2-1 Cable embedding

2.3 Cabinet Installation

Installation Procedure

1) Use Bolt Holes Dimensioning to mark the installation position of the cabinet, as shown in Figure 2-2
2) Drive four expansion bolts into the Bolt Holes Dimensioning, as shown in Figure 2-3.
3) Open the access door and install the parking barrier, as shown in Figure 2-4.
4) Install screw pads and use a wrench to tighten nuts, as shown in Figure 2-5.

5) Close the access door.

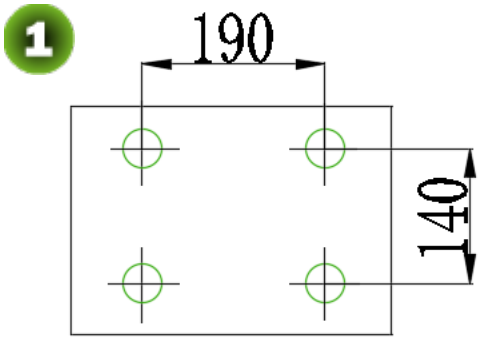

Figure 2-2

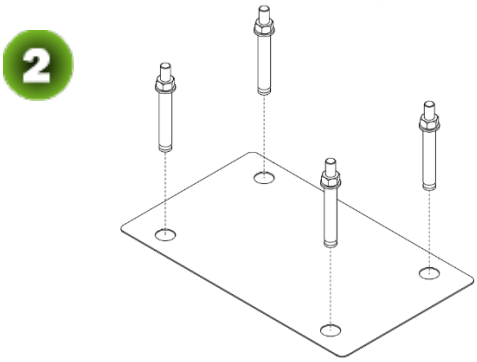

Figure 2-3

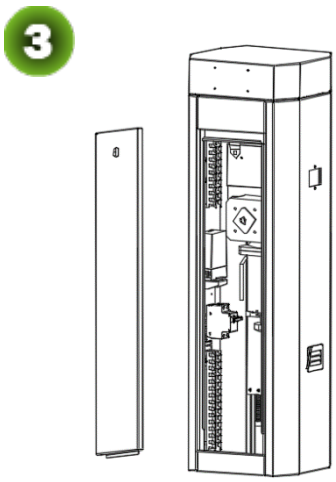

Figure 2-4

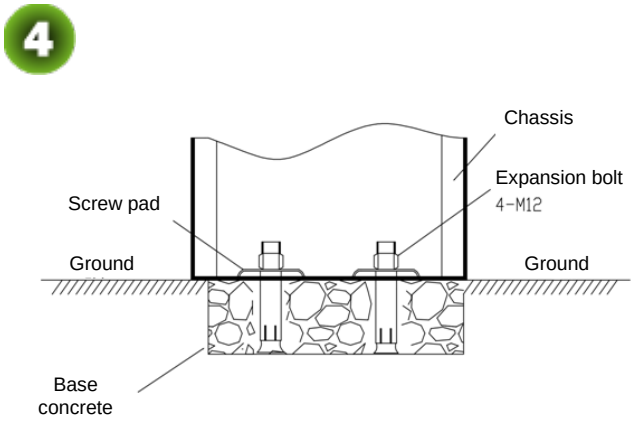

Figure 2-5

2.4 Boom Installation

Boom Installation Procedure

1) Take out booms.
2) Install the booms. (If your purchase is PB3010L/R, there will be only one boom. If your purchase is PB3030L/R or PB 3060L/R there will be a main boom and a vice boom which need to be connected together.)
3) Putting the connection part of vice boom into the main boom, then fixed by 2 screws.
4) Installing the boom to the chassis.

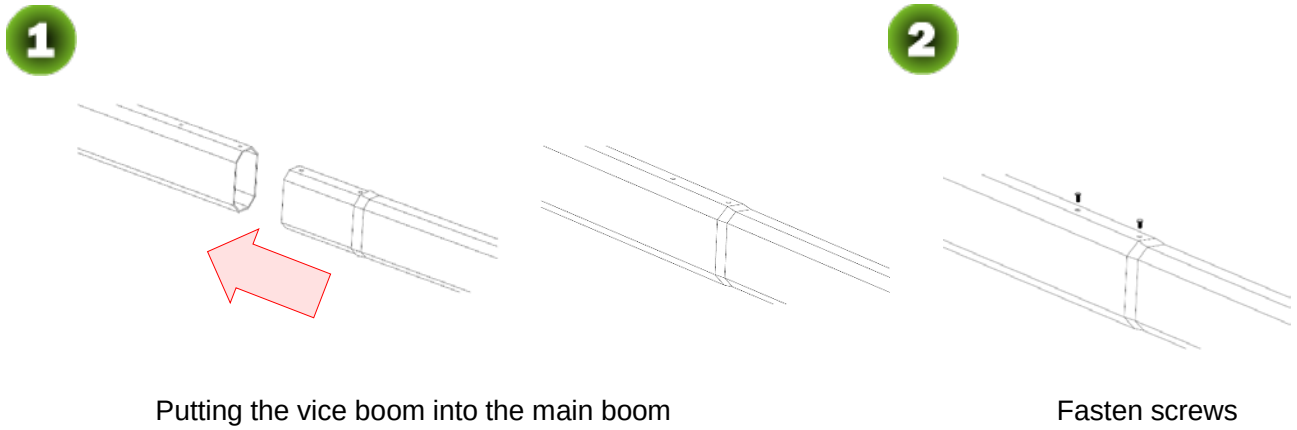

Figure 2-6 Connect the main boom with vice boom together

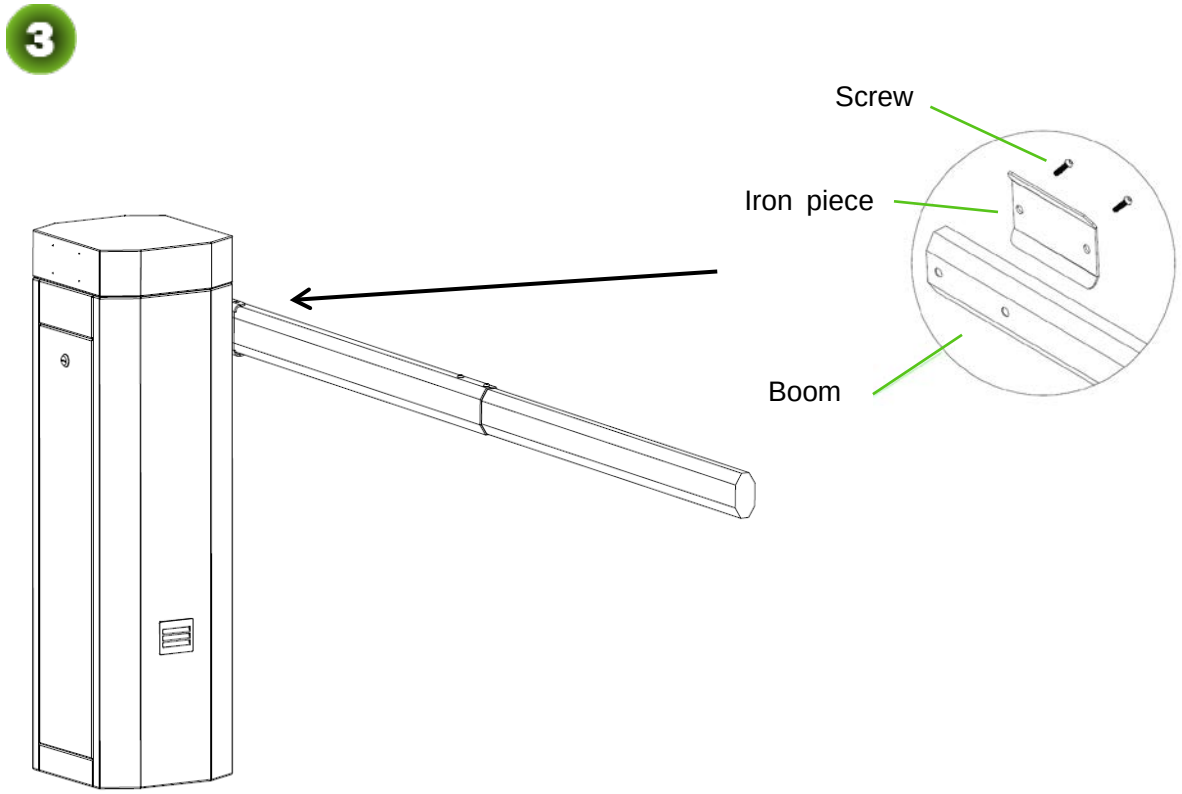

Figure 2-7 Installing the Boom to the Chassis

2.5 System Diagram

Installation Diagram for the Parking barrier and Wall.
The distance between the chassis and the wall should be greater than or equal to 100 mm.
The distance between the boom and the wall should be greater than or equal to 100 mm.

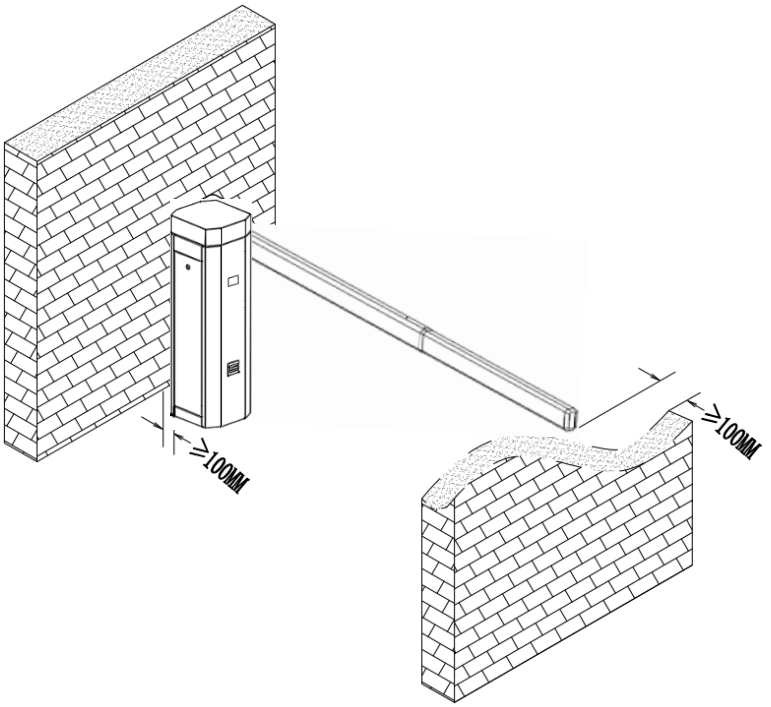

System Diagram

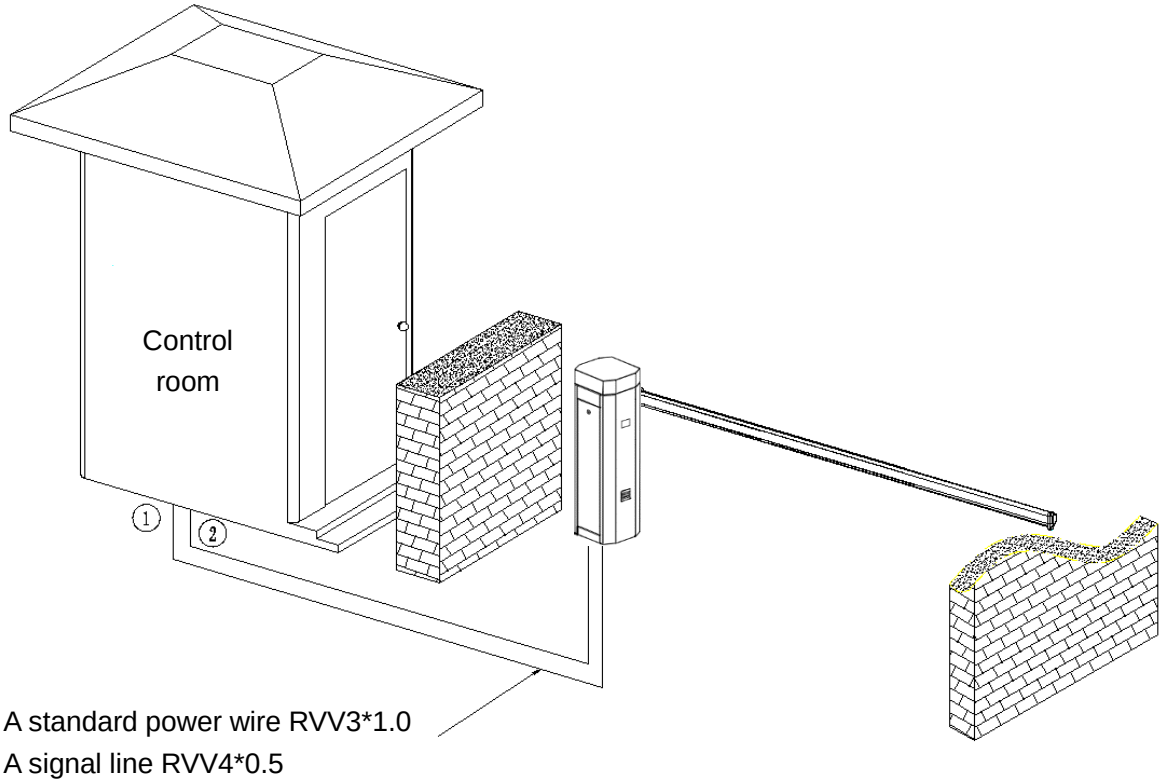

2.6 Wiring Diagram of the Push Button Station

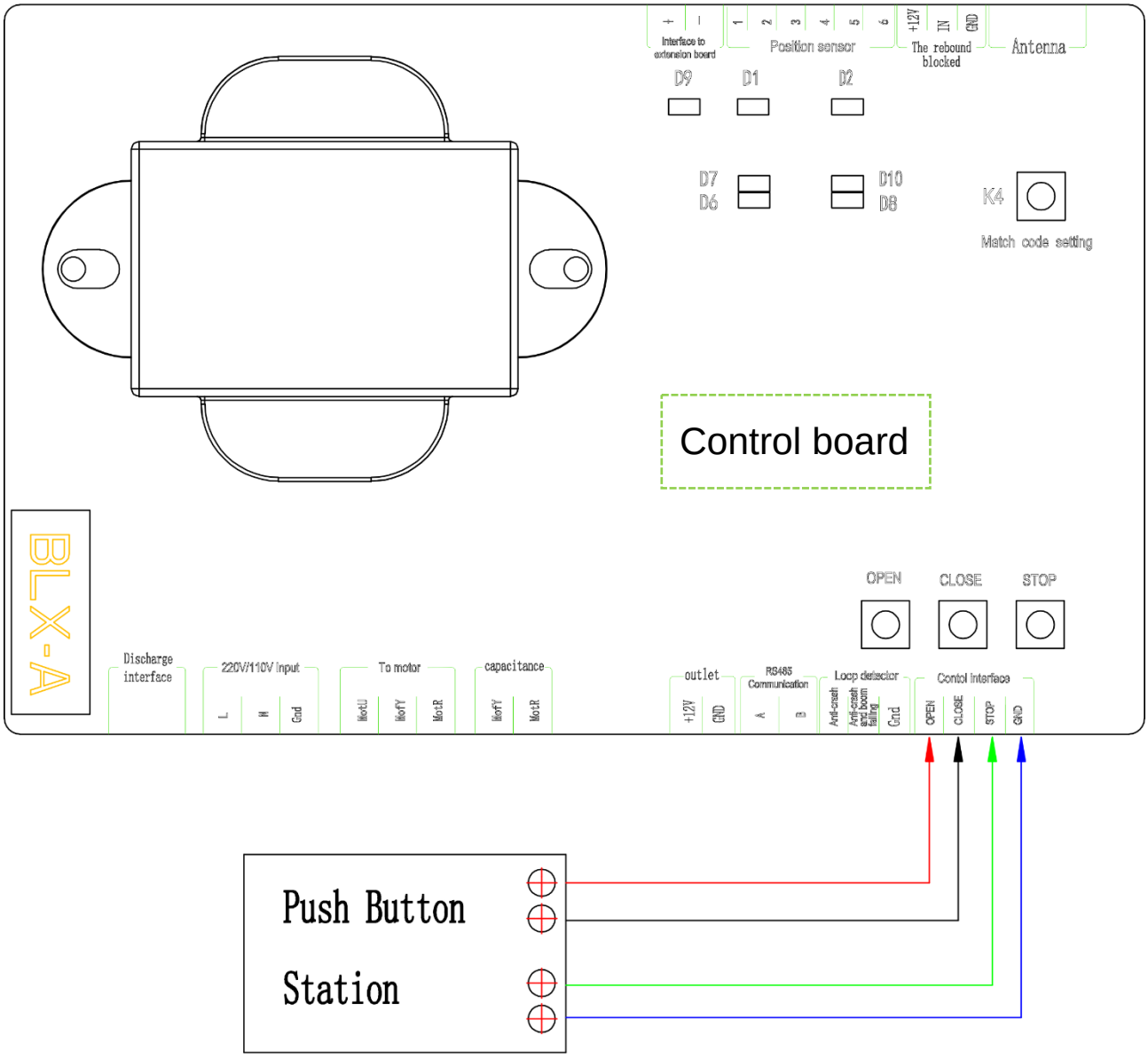

Chapter 3 Troubleshoot

1) If the boom fails to fall into a level position, adjust position A; if the boom fails to be lifted upright, adjust position B. See Figure 3-1.

2) If the boom shakes during falling or lifting, adjust position C. The shaking that occurs during lifting is caused by the overlarge spring force. In this case, loosen the screws. If the boom shakes during falling, tighten the screws. See Figure 3-2.

3) Use the motor handle to lift the boom in the case of a power failure, See Figure 3-3.

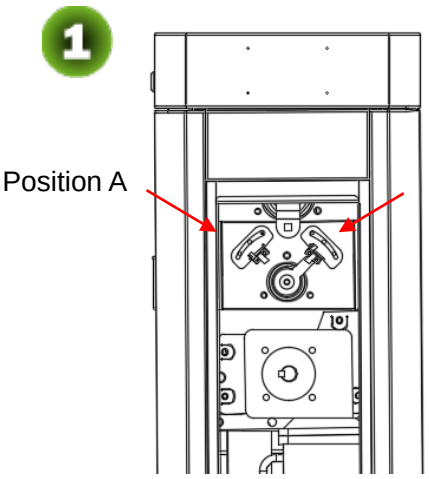

Figure 3-1

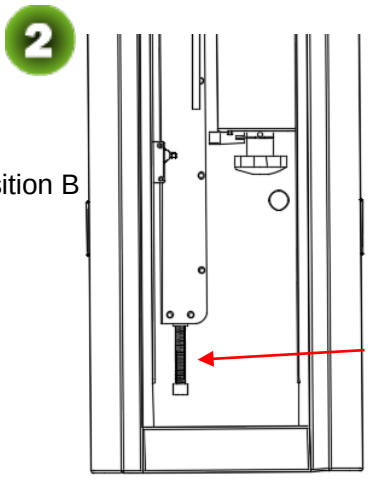

Figure 3-2

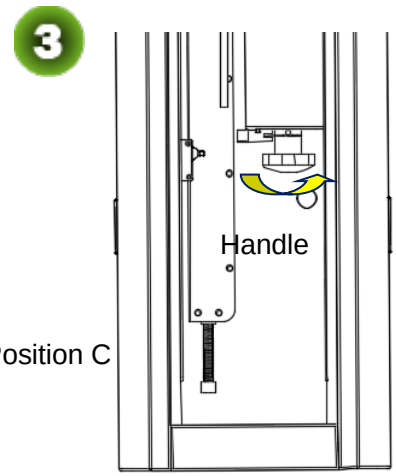

Figure 3-3

Chapter 4 Optional Functions

4.1 Loop Detector

Loop detector in the parking system consist of loop, loop detector and control board. The loop is installed under the ground. When loop detect a vehicle, the boom will not fall down, after the vehicle pass, the boom will automatically fall down. The wiring diagram is shown in the figure 4-1.

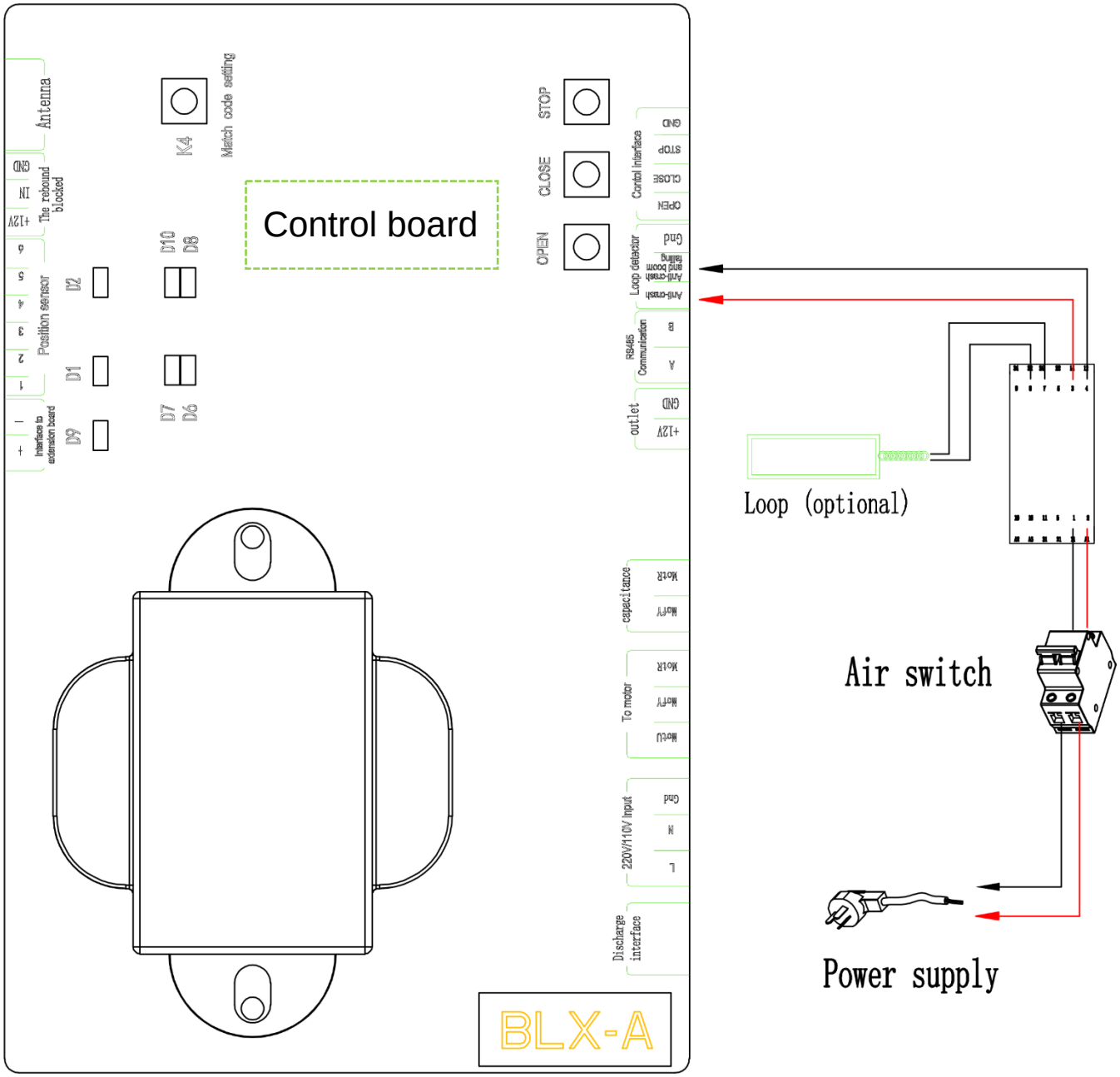

Figure 4-1

4.2 Cooling System

The cooling system consists of a 12V power supply, an extension board and a fan. The installation of fan is shown in the 4-2 and the wiring diagram is shown in the figure 4-3.

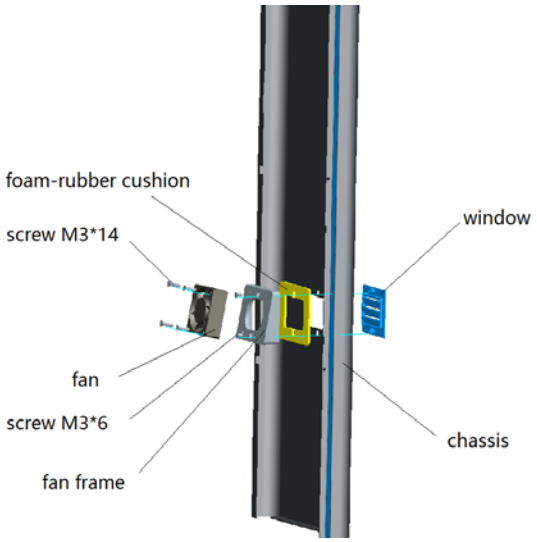

Figure 4-2

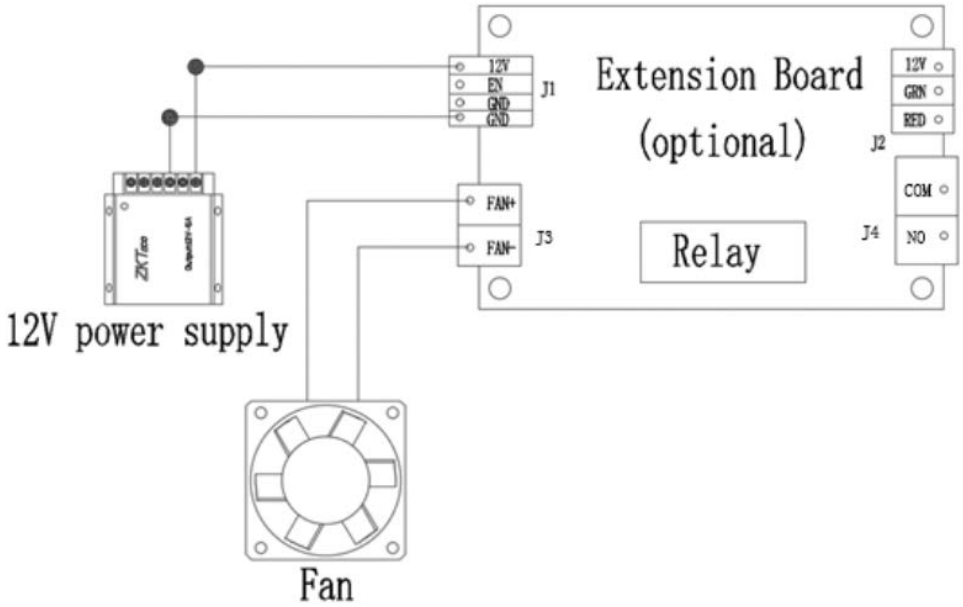

Figure 4-3

Chapter 5 Device Maintenance

1) Maintain the boom. Fix the reflective sticker.

2) Tighten terminals connector of the device.

3) Clear dust on components inside the cabinet.

Note that technicians should maintain the parking barrier system once a month.

Appendix Wiring Diagram

1) Interface of the Main Control Board

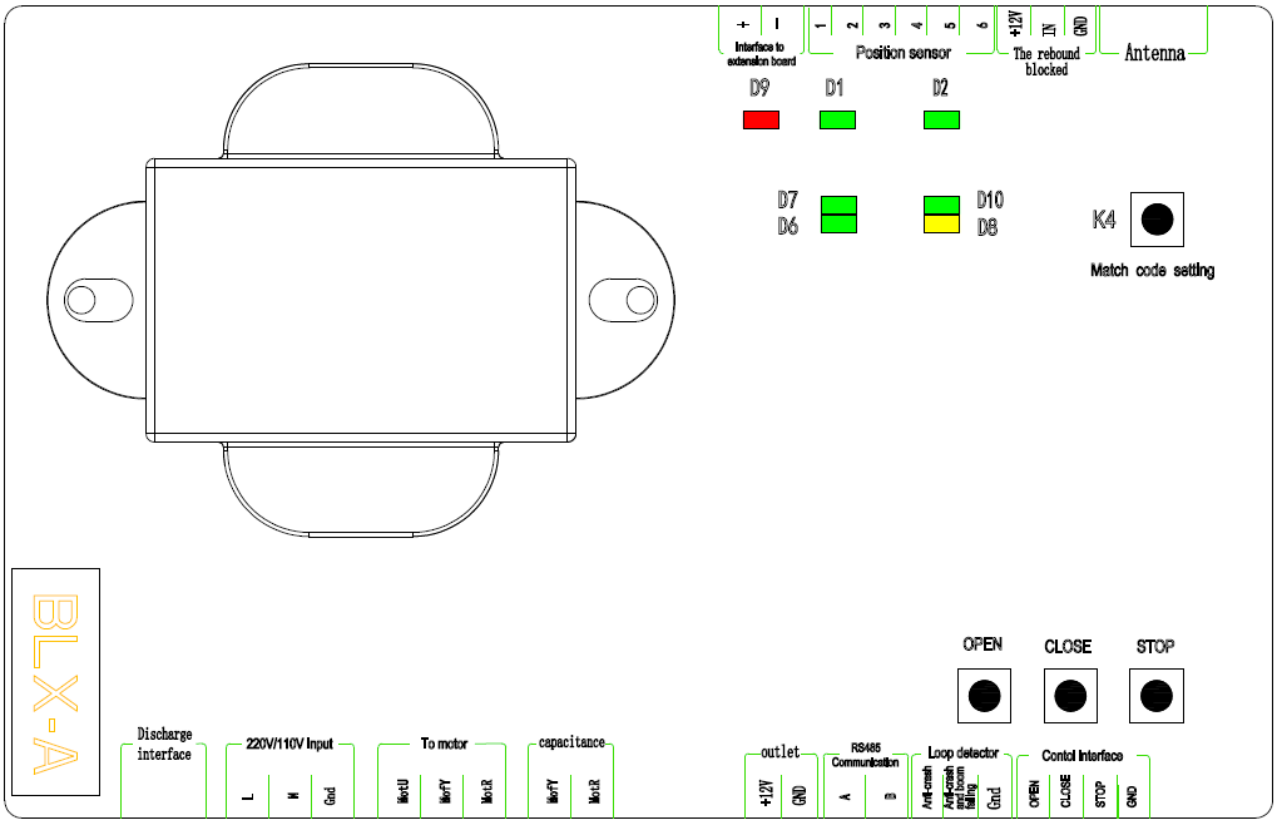

Delete All Transmitter

Press K4 setting button until D8 yellow light flashes. Hold on K4, press stop button on control board until D9 red light flashes one time. All the registered transmitters will be deleted after successful operation.

Register the transmitter

Press K4 setting button until D8 yellow light flashes. Hold on K4, press any button on transmitter until D9 red light flashes one time. Maximum 7 different code transmitters can be registered.

2) Interface of the Extension board

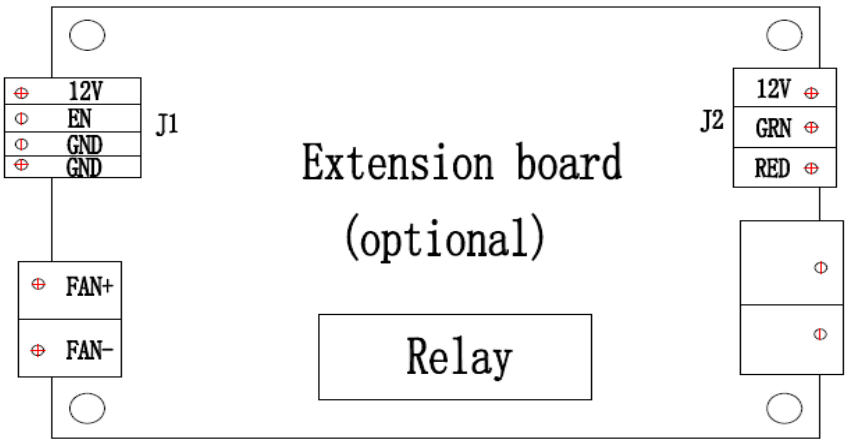

3) Wiring Diagram of the Mains Supply and Motor

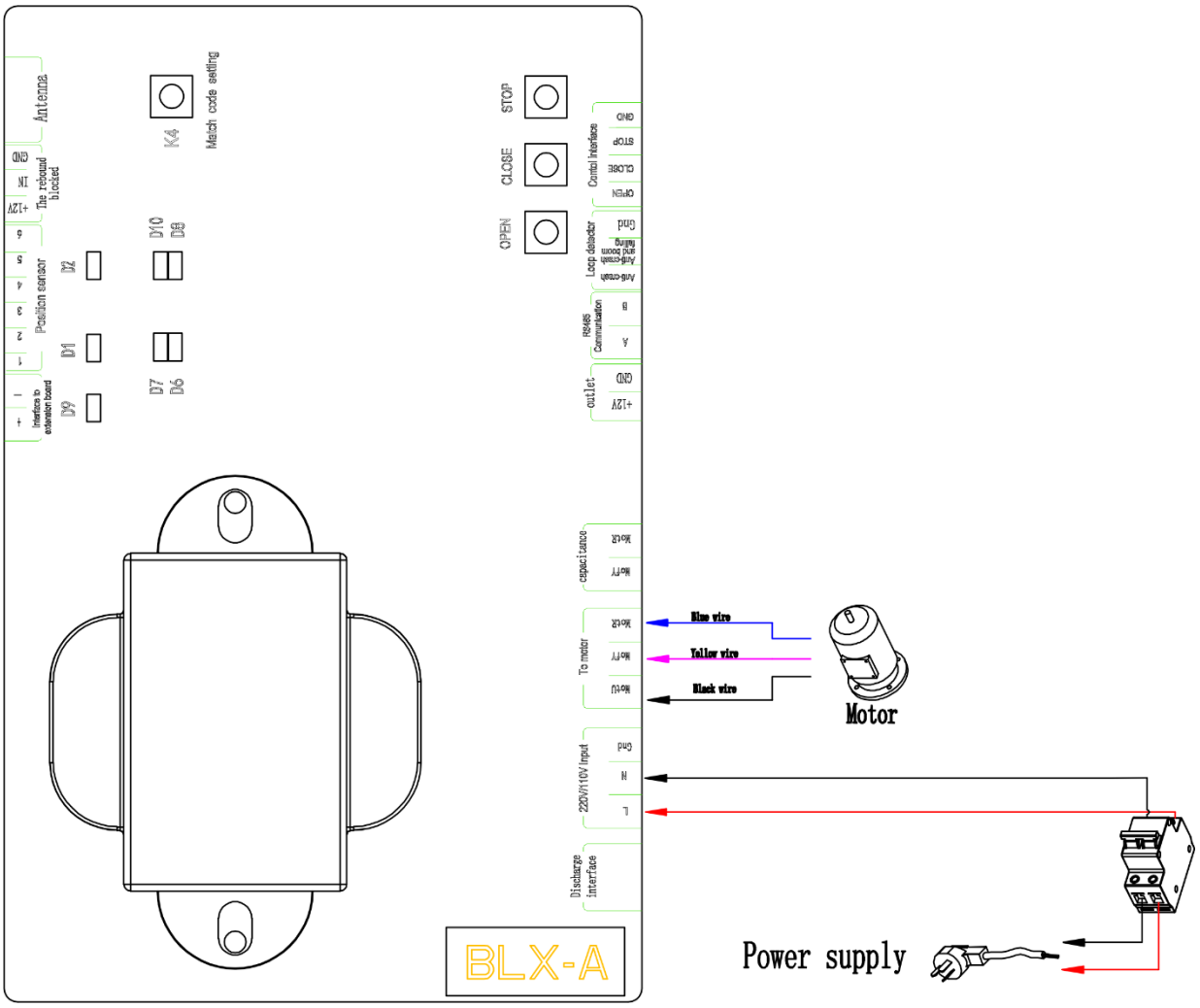
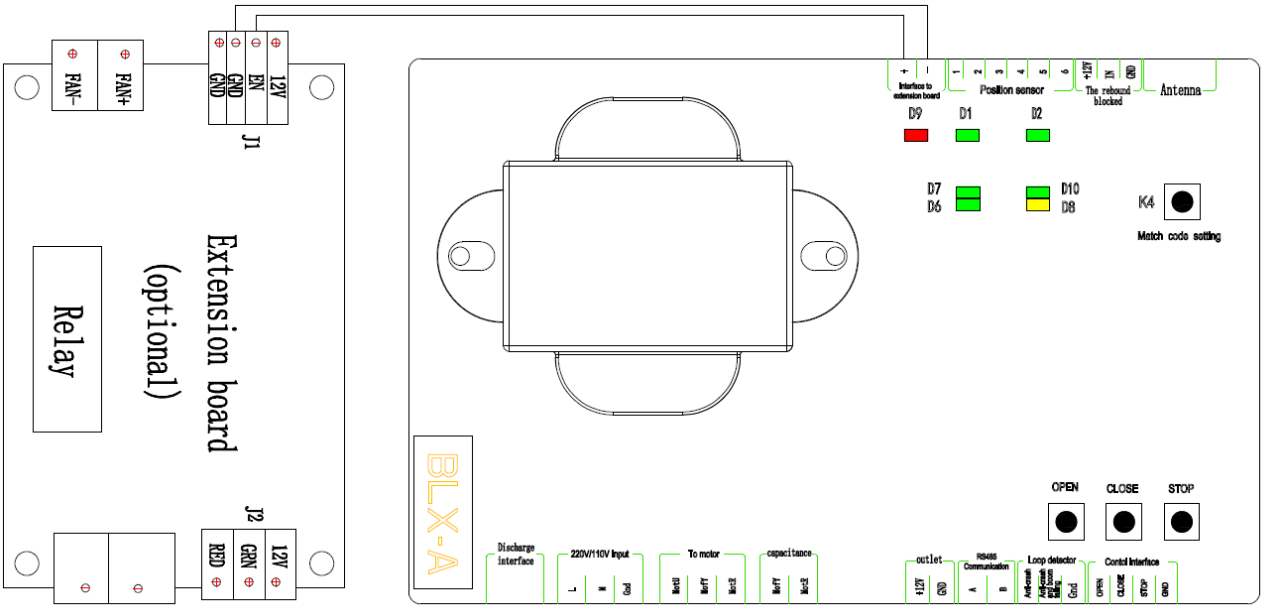
4) Wiring Diagram of the Extension Board and Main Control Board