Installation Guide

PB3000

Contents

Chapter 1 Cable Embedding 1

Chapter 2 Cabinet Installation 2

Chapter 3 Boom Installation 3

Chapter 4 Control board introduction 4

Chapter 5 Troubleshoot 5

Chapter 1 Cable Embedding

1) Prepare φ25 protective sleeve and cable in advance.

2) Route cables to be connected through protective sleeves.

3) Use a tool to open a cable tray on the ground, see figure 1-1.

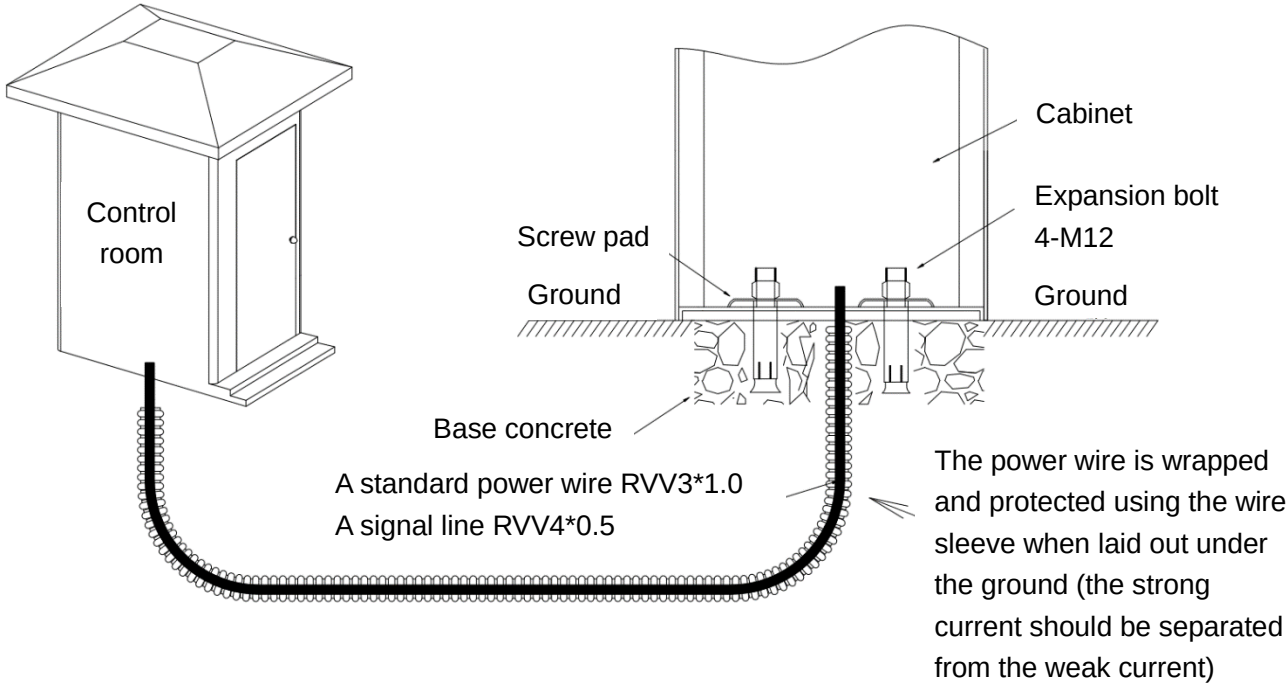

Figure 1-1 Cable embedding

Chapter 2 Cabinet Installation

1) Use Bolt Holes Dimensioning to mark the installation position of the cabinet.
2) Drive four expansion bolts into the Bolt Holes Dimensioning, as shown in figure 2-1.
3) Open the access door and install the parking barrier.
4) Install screw pads and use a wrench to tighten nuts, as shown in figure 2-2.
5) Close the access door.

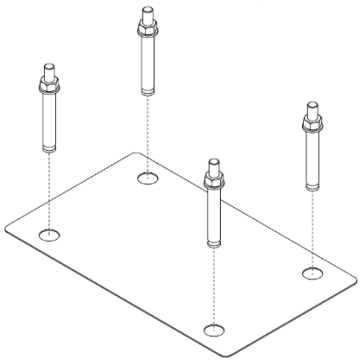

Figure 2-1

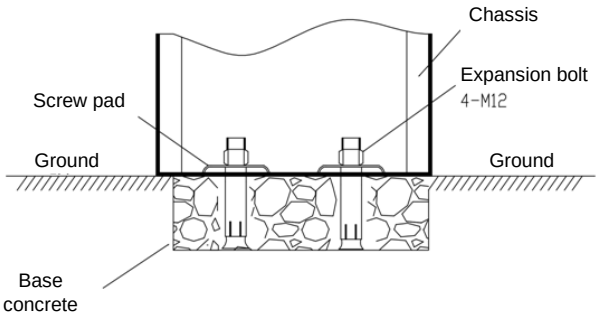

Figure 2-2

Chapter 3 Boom Installation

1) Take out the booms.

2) Install the booms. (If your purchase is PB3010L/R, there will be only one boom. If your purchase is PB3030L/R or PB 3060L/R there will be a main boom and a vice boom which need to be connected together. See figure 3-1.)

3) Putting the vice boom insert into the main boom, then fastened by 2 screws.

4) Installing the boom to the chassis, as shown in figure 3-2.

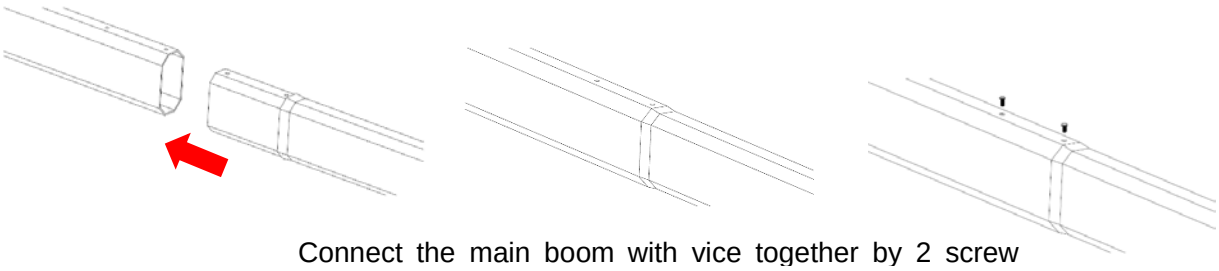

Figure 3-1

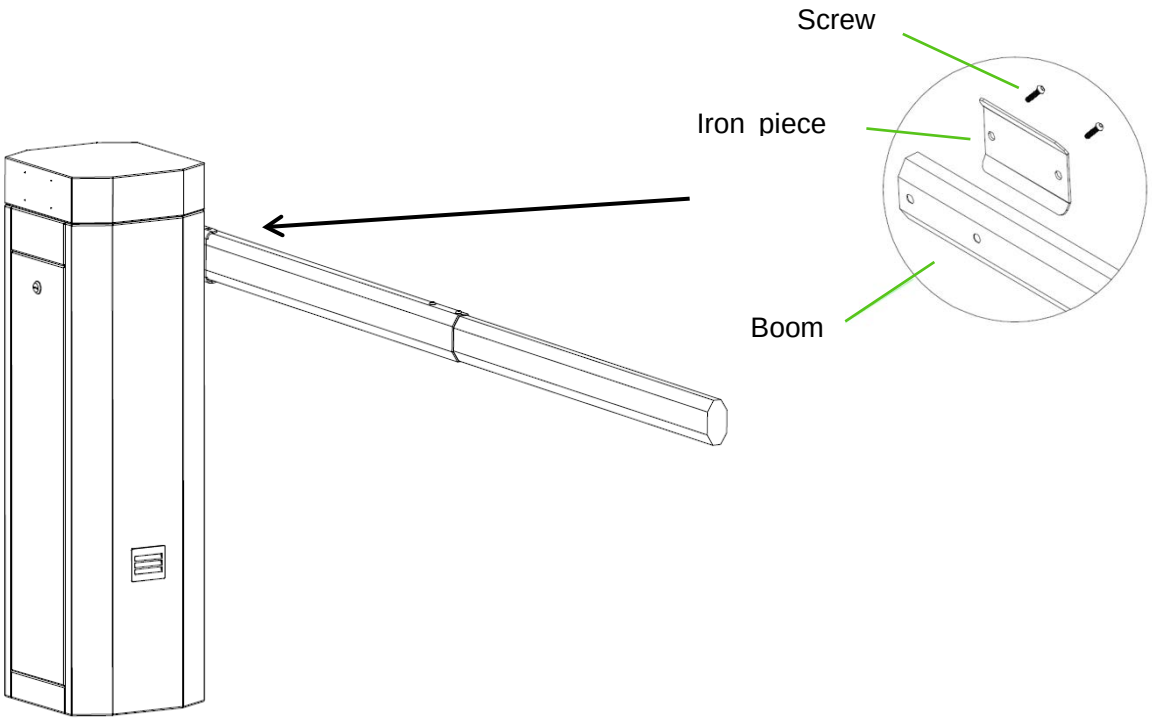

Figure 3-2 Installing the Boom to the Chassis

Chapter 4 Control board introduction

1) Interface of the Main Control Board

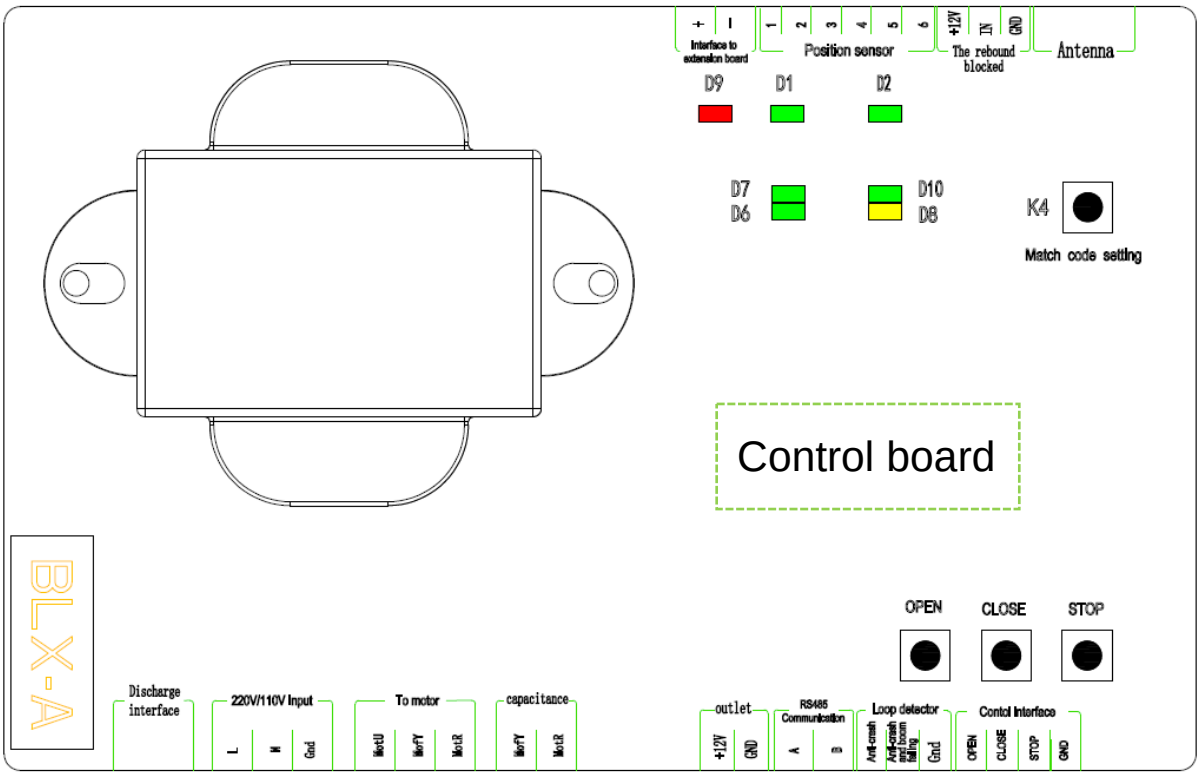

Delete All Transmitter

Press K4 setting button until D8 yellow light flashes. Hold on K4, press stop button on control board until D9 red light flashes one time. All the registered transmitters will be deleted after successful operation.

Register the transmitter

Press K4 setting button until D8 yellow light flashes. Hold on K4, press any button on transmitter until D9 red light flash one time. Maximum 7 different code transmitters can be registered.

2) Interface of the Extension board

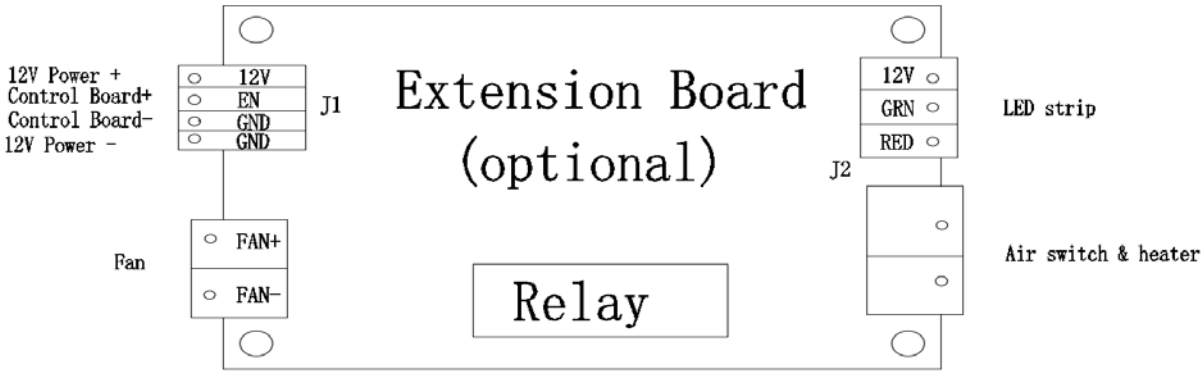

Chapter 5 Troubleshoot

1) If the boom fails to fall into a level position, adjust position A; if the boom fails to be lifted upright, adjust position B. See Figure 5-1.

2) If the boom shakes during falling or lifting, adjust position C. The shaking that occurs during lifting is caused by the overlarge spring force. In this case, loosen the screws. If the boom shakes during falling, tighten the screws. See Figure 5-2.

3) Use the motor handle to lift the boom in the case of a power failure, See Figure 5-3.

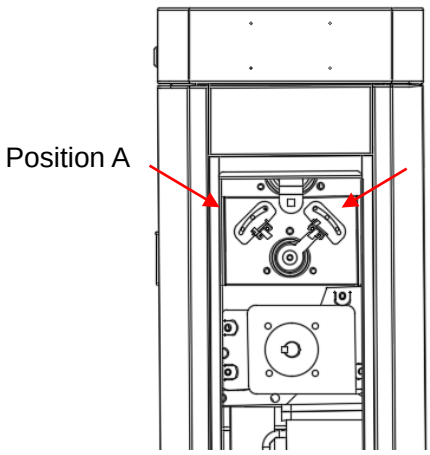

Figure 5-1

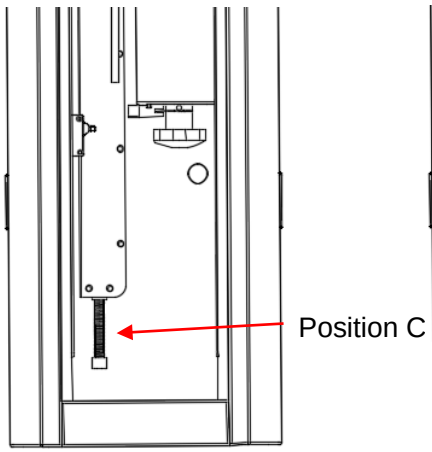

Figure 5-2

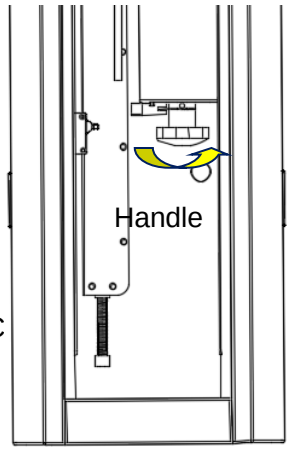

Figure 5-3