Z3104/08/16XE-CL

4/8/16 Channel Penta-brid 1080P Lite Digital Video Recorder

Features

- H.264 Decoding
- Support AHD/TVI/CVI/CVBS/IP Video Input
- Support HDMI Up To 1080P Output
- Support 4/8/16CH 1080P Lite Resolution Preview and Playback
- Cloud Service, P2P
- Mobile phone remote monitoring (iOS, Android)
- Multi-browser access (IE, Chrome, Firefox, Safari)

System Overview

ZKTeco Z3100XE-CL series DVR could deliver up to excellent 1080P lite resolution excellent image over advanced H.264 compression. It's the ideal consideration for the balance of quality, performance and budget.

The friendly GUI provides intuitive shortcut operations, remote control and management, flexible storage, smart search and playback.

It's widely used for the government, banking sectors, manufacturers, educational or commerical projects.

Powered by the strong interoperability and Onvif Profile S, it's compatible with a variety of 3rd party crossing platform VMS.

Functions

4-in-1 Auto Detection

It could detect the camera signal automatically without settings, true plug and play for AHD/TVI/CVI/CVBS.

Long Distance Transmission

Powered by leading HD Videoloss technology, it supports up to 500m/800m transmission over RG59/RG6 coaxial cables separately.

AntarView Cloud Service

Flexibly and remotely monitor at anytime or anywhere with AntarView APP.

Technical Specification

Model	Z3104XE-CL	Z3108XE-CL	Z3116XE-CL
System			
Processor	Multi-core Embedded Processor		
Operation System	Embedded Linux		
Display			
Interface	1 HDMI, 1 VGA		
OSD	Camera Title, Time, Video Loss, Motion Detection, Recording		
Video Detection and Alarm			
Linkaged Events	Alarm Out, Linkage Record, Snapshot, PTZ Linkage, Tour, Show Message, Buzzer, Send Email, FTP, Upload Cloud, Push Alarm		
Motion Detection	MD Zones: 396(22x18)		
Alarm Input	N/A		
Alarm Output	N/A		
Playback and Backup			
Playback Channel	4	8	16
Search Mode	Time/Date, MD and Exact Search, Smart Search		
Playback Function	Play, Pause, Stop, Rewind, Fast Play, Slow Play, Next Camera, Previous Camera, Full Screen, Shuffle, Backup Selection, Digital Zoom		
Backup Mode	USB Device/Network		
Interface and Storage			
Network Interface	1 RJ-45 port(10/100Mbps)		
HDD	1 SATA, up to 10TB capacity for each HDD		
USB	2xUSB 2.0		

Audio and Video			
IPC Input Channel	4	8	16
Two-way Talk	1 Channel Input, 1 Channel Output, RCA		
Recording			
Video Compression	H.264		
Recording Resolution	720P/1080P Lite		
Incoming Bandwidth	24Mbps	48Mbps	96Mbps
Record Mode	Manual, Schedule, Motion Detection, Video Loss, Privacy Mask		
Network			
Network Protocol	HTTP, TCP/IP, IPV4, UDP, RTSP, DHCP, FTP, PPPOE, NTP, UPnP, P2P, DDNS, SMTP		
Max. Online User	20		
Mobile App	Antarview(iOS & Android)		
Interoperability	Onvif Profile S, SDK		
Electrical			
Power Supply	DC 12V2A		DC 12V3.3A
Consumption	6W without HDD		9W without HDD
Environmental			
Working Temperature	0℃~+55℃		
Working Humidity	10~90%		
Construction			
Dimensions	4/8 Channel 215mmx235mmx45mm		
	16 Channel 320mmx246mmx48mm		
Net Weight	1KG		1.5KG
Gross Weight	1.4KG		2.1KG

Ordering Information

Type	Part Number	Description
1080P Lite DVR	Z3104XE-CL	4 channel 1 SATA DVR
	Z3108XE-CL	8 channel 1 SATA DVR
	Z3116XE-CL	16 channel 1 SATA DVR

Dimensions (mm)

4/8 Channel

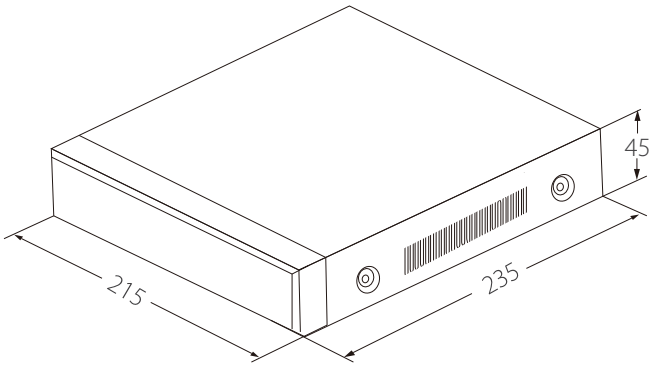

16 Channel

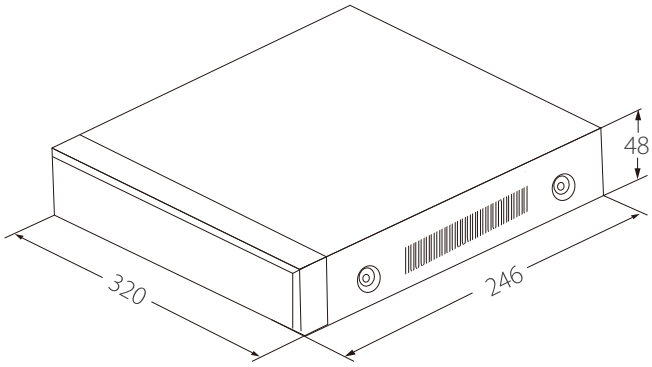

Rear Panel

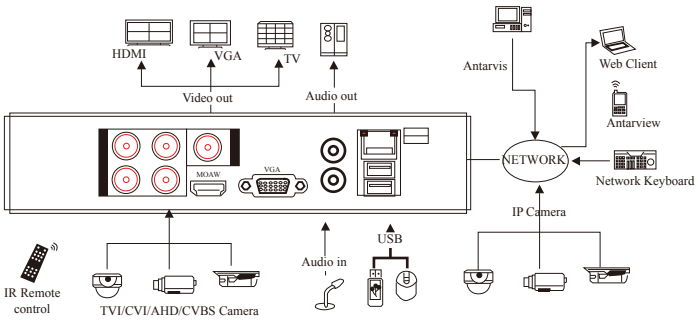

More details

ZKTECO CO.,LTD.
www.zkteco.com
E-mail: sales@zkteco.com

Copyright ©2018 ZKTECO CO., LTD. All rights reserved.