Z3104/08XE-P

4/8 Channel Penta-brid 5MP Digital Video Recorder

Features

- H.264 Decoding
- Support AHD/TVI/CVI/CVBS/IP Video Input
- Support HDMI Up To 4K Output
- Support 4/8CH 5MP Resolution Preview and Playback
- Cloud Service, P2P
- Mobile phone remote monitoring (iOS, Android)
- Multi-browser access (IE, Chrome, Firefox, Safari)

System Overview

ZKTeco Z3100XE-P series DVR could deliver up to excellent 5MP resolution image over advanced H.264 compression.
It's the ideal consideration for the balance of quality, performance and budget.
The friendly GUI provides intuitive shortcut operations, remote control and management, flexible storage, smart search and playback.
It's widely used for the government, banking sectors, manufacturers, educational or commerical projects.
Powered by the strong interoperability and Onvif Profile S, it's compatible with a variety of 3rd party crossing platform VMS.

Functions

4-in-1 Auto Detection

It could detect the camera signal automatically without settings, true plug and play for AHD/TVI/CVI/CVBS.

Long Distance Transmission

Powered by leading HD Videoloss technology, it supports up to 500m/800m transmission over RG59/RG6 coaxial cables separately.

AntarView Cloud Service

Flexibly and remotely monitor at anytime or anywhere with AntarView APP.

Technical Specification

Model	Z3104XE-P	Z3108XE-P
System		
Processor	Multi-core Embedded Processor	
Operation System	Embedded Linux	
Display		
Interface	1 HDMI, 1 VGA	
OSD	Camera Title, Time, Video Loss, Motion Detection, Recording	
Video Detection and Alarm		
Linkaged Events	Alarm Out, Linkage Record, Snapshot, PTZ Linkage, Tour, Show Message, Buzzer, Send Email, FTP, Upload Cloud, Push Alarm	
Motion Detection	MD Zones: 396(22x18)	
Alarm Input	4	8
Alarm Output	1	4
Playback and Backup		
Playback Channel	4	8
Search Mode	Time/Date, MD and Exact Search, Smart Search	
Playback Function	Play, Pause, Stop, Rewind, Fast Play, Slow Play, Next Camera, Previous Camera, Full Screen, Shuffle, Backup Selection, Digital Zoom	
Backup Mode	USB Device/Network	
Interface and Storage		
Network Interface	1 RJ-45 port(10/100Mbps)	
HDD	1 SATA, up to 10TB capacity for each HDD	
USB	2xUSB 2.0	

Audio and Video		
IPC Input Channel	4	8
Two-way Talk	1 Channel Input, 1 Channel Output, RCA	
Recording		
Video Compression	H.264	
Recording Resolution	5MP/4MP/3MP/1080P/1.3MP/720P	
Incoming Bandwidth	32Mbps	64Mbps
Record Mode	Manual, Schedule, Motion Detection, Video Loss, Privacy Mask	
Network		
Network Protocol	HTTP, TCP/IP, IPV4, UDP, RTSP, DHCP, FTP, PPPOE, NTP, UPnP, P2P, DDNS, SMTP	
Max. Online User	20	
Mobile App	Antarview(iOS & Android)	
Interoperability	Onvif Profile S, SDK	
Electrical		
Power Supply	DC 12V2A	
Consumption	7W without HDD	11W without HDD
Environmental		
Working Temperature	0 ℃ ~+55 ℃	
Working Humidity	10~90%	
Construction		
Dimensions	320mmx246mmx48mm	
Net Weight	1.2KG	
Gross Weight	2KG	

Ordering Information

Type	Part Number	Description
5MP DVR	Z3104XE-P	4 channel 1 SATA DVR
	Z3108XE-P	8 channel 1 SATA DVR

Dimensions (mm)

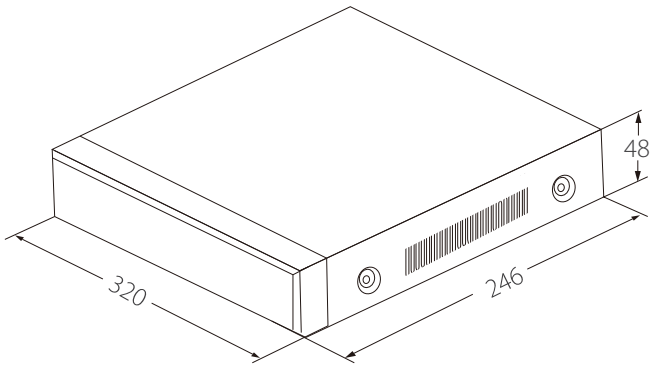

Rear Panel

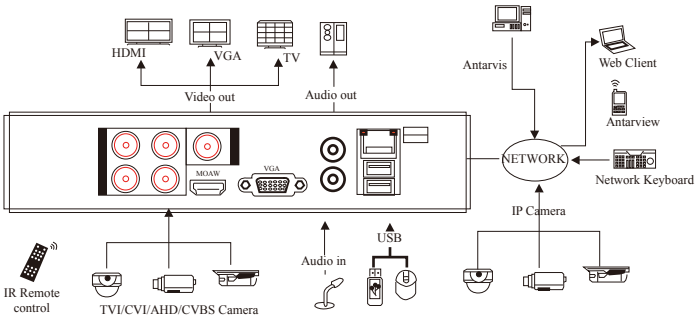

More details

ZKTECO CO.,LTD.
www.zkteco.com
E-mail: sales@zkteco.com

Copyright ©2018 ZKTECO CO., LTD. All rights reserved.