Z3116XH-C

16 Channel Penta-brid 1080P Digital Video Recorder

Features

- H.264 Decoding
- Support AHD/TVI/CVI/CVBS/IP Video Input
- Support HDMI Up To 1080P Output
- Support 16CH 1080P Resolution Preview and Playback
- Cloud Service, P2P
- Mobile phone remote monitoring (iOS, Android)
- Multi-browser access (IE, Chrome, Firefox, Safari)

1080P H.264

System Overview

ZKTeco Z3100XH-C series DVR could deliver up to excellent 1080P resolution image over advanced H.264 compression.
It's the ideal consideration for the balance of quality, performance and budget.
The friendly GUI provides intuitive shortcut operations, remote control and management, flexible storage, smart search and playback.
It's widely used for the government, banking sectors, manufacturers, educational or commerical projects.
Powered by the strong interoperability and Onvif Profile S, it's compatible with a variety of 3rd party crossing platform VMS.

Functions

4-in-1 Auto Detection

It could detect the camera signal automatically without settings, true plug and play for AHD/TVI/CVI/CVBS.

Long Distance Transmission

Powered by leading HD Videoloss technology, it supports up to 500m/800m transmission over RG59/RG6 coaxial cables separately.

AntarView Cloud Service

Flexibly and remotely monitor at anytime or anywhere with AntarView APP.

Technical Specification

Model	Z3116XH-C
System	
Processor	Multi-core Embedded Processor
Operation System	Embedded Linux
Display	
Interface	1 HDMI, 1 VGA
OSD	Camera Title, Time, Video Loss, Motion Detection, Recording
Video Detection and Alarm	
Linkaged Events	Alarm Out, Linkage Record, Snapshot, PTZ Linkage, Tour, Show Message, Buzzer, Send Email, FTP, Upload Cloud, Push Alarm
Motion Detection	MD Zones: 396(22x18)
Alarm Input	16
Alarm Output	4
Playback and Backup	
Playback Channel	16
Search Mode	Time/Date, MD and Exact Search, Smart Search
Playback Function	Play, Pause, Stop, Rewind, Fast Play, Slow Play, Next Camera, Previous Camera, Full Screen, Shuffle, Backup Selection, Digital Zoom
Backup Mode	USB Device/Network
Interface and Storage	
Network Interface	1 RJ-45 port(10/100Mbps)
HDD	8 SATA, up to 10TB capacity for each HDD
USB	2xUSB 2.0

Audio and Video	
Analog Camera Input Channel	16
Two-way Talk	4 Channel Input, 1 Channel Output, RCA
Recording	
Video Compression	H.264
Recording Resolution	1080P/720P
Incoming Bandwidth	192Mbps
Record Mode	Manual, Schedule, Motion Detection, Video Loss, Privacy Mask
Network	
Network Protocol	HTTP, TCP/IP, IPV4, UDP, RTSP, DHCP, FTP, PPPOE, NTP, UPnP, P2P, DDNS, SMTP
Max. Online User	20
Mobile App	Antarview(iOS & Android)
Interoperability	Onvif Profile S, SDK
Electrical	
Power Supply	110V~220V±10% 47Hz～63Hz
Consumption	16W without HDD
Environmental	
Working Temperature	0℃~+55℃
Working Humidity	10~90%
Construction	
Dimensions	441mmx448mmx88mm
Net Weight	6.8KG
Gross Weight	9KG

Ordering Information

Type	Part Number	Description
1080P DVR	Z3116XH-C	16 channel 8 SATA DVR

Dimensions (mm)

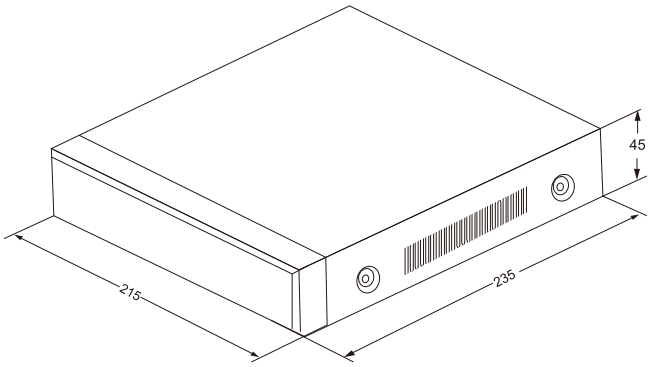

Rear Panel

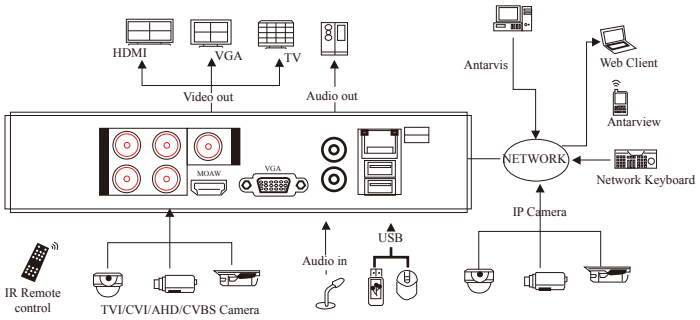

More details

ZKTECO CO.,LTD.
www.zkteco.com
E-mail: sales@zkteco.com

Copyright ©2018 ZKTECO CO., LTD. All rights reserved.