SPRT®

Thermal Receipt Printer User's Manual
SP-POS801

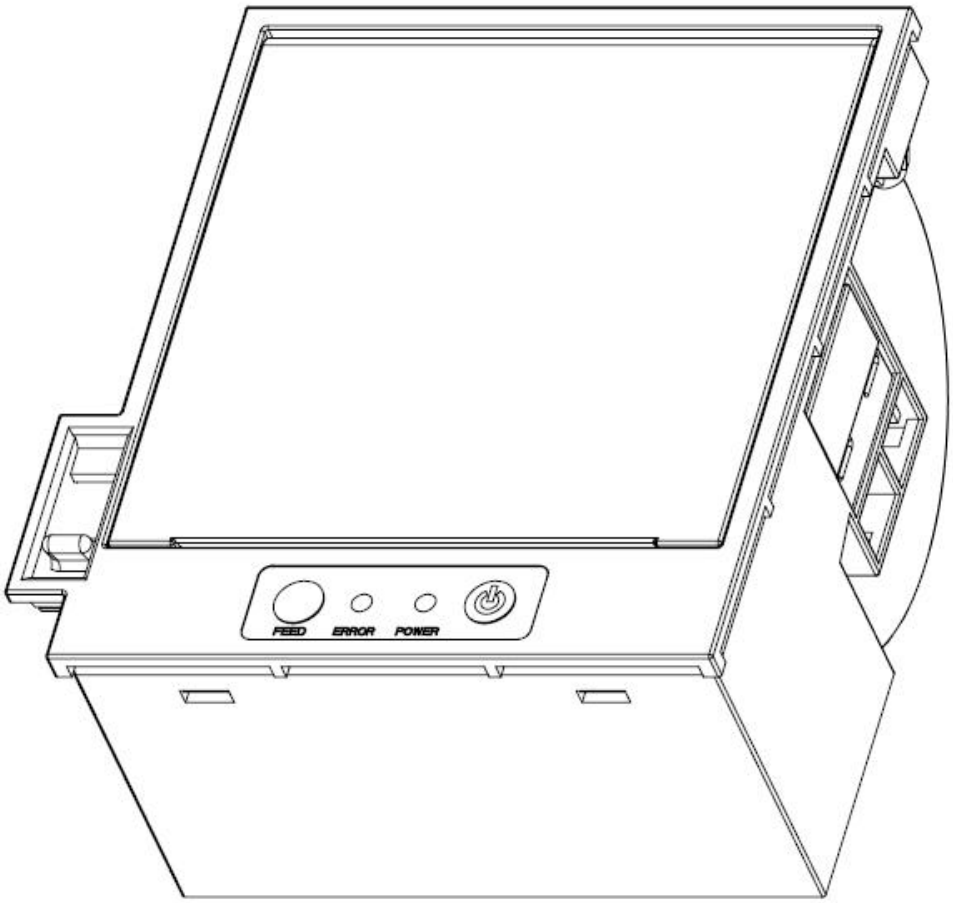

（Ver 1.00）

Beijing Spirit Technology Development Co.,Ltd.

Content

Content.....1
Introduction.....2
Chapter 1 Feature and Performance.....2
1.1 Print Performance.....2
1.2 Print Paper.....2
1.3 Print Font.....3
1.4 Interface.....3
1.5 Print Control Commands.....3
1.6 Power Supply.....3
1.7 Operation Environment.....12
1.8 Outline Dimension.....12
Chapter 2 Operation Specification.....13
2.1 Printer Appearance.....13
2.2 Installation of the printer.....15
2.3 Paper Installation.....16
2.3.1 Paper Loading.....16
2.3.2 Solution to Paper Jam.....16
2.4 Interface.....17
2.4.1 Serial Interface.....17
2.4.2 USB interface.....19
2.4.3 Power Connection.....19
2.5 Buttons and Indicators.....19
2.6 Turn on the printer.....21
2.7 Self test.....21
2.8 Hexadecimal Printing.....22
2.9 Setup of printer parameter.....23
2.10 Entering program upgrading mode.....23
APPENDIX A：Parameters Setting.....23

Introduction

POS801 printer is a new type line thermal printer, which features is fast speed printing, low printing noise, high reliability, perfect printing quality, avoiding the vexation of regular maintenance.

POS801 is with small dimension, easy operating, and wide application field.

Chapter 1 Feature and Performance

1.1 Print Performance

- Print method: direct thermal printing
- Print paper width: 79.5±0.5mm
- Print density: 8 dots/mm, 576 dots/line
- Print speed: max 170mm / sec.
- Reliability
  (1)Print head life: 100km
  Using condition:
  * Print 12 × 24 ANK characters, print 50 lines each time, intermittent print repeatedly.
  * Use specified thermal paper

  （2）Cutter life: 700,000 cuts

  Using condition: less than 30 cuts/minute
- Valid print width: 72mm

1.2 Printing Paper

- Thermal paper roll model: TF50KS－E（Japan paper co.ltd）
  AF50KS-E (JUJO THERMAL)
- Thermal paper roll: Width－－－79.5±0.5mm
  Outer Diameter －－－ 80mm（max.）
  Inner Diameter－－－ 13mm（min.）
  Thickness －－－ 0.06mm～0.08mm

1.3 Printing Font

- ANK Character Set

  12×24 dots，1.5（W）×3.00（H）mm

- GB18030(Chinese):

  24×24 dots，3.00（W）×3.00（H）mm.

1.4 Interface

- RS-232C Serial Interface：

  IDC10 socket, supports XON/XOFF and DTR/DSR protocols.

  Baud rate:1200, 2400, 4800, 9600, 19200, 38400, 57600, 115200bps adjustable.

  Data structure: 1start bit + (7 or 8) data bits + 1 stop bit.

  Parity checking: no parity or odd, even parity optional.

- USB Interface：

  Mini USB interface

1.5 Print Control Commands

- Character print commands: support double-width, double height print of ANK characters, user-defined characters and Chinese characters, the character line spacing is adjustable.

- Graphics print commands: support the print of bit-map graphics and download bit-map graphics with different density

- GS bar code print commands: support UPC-A，UPC-E，EAN-13，EAN-8，CODE39，ITF，CODEBAR，CODE93，CODE128,PDF417,QR code, DATA Matrix bar code print.

1.6 Power Supply

- DC24V±10％，2A，2114s-02 power socket.

1.7 Operation Environment

● Operation temperature: -10～50℃; Operation humidity: 10～80%

● Storage temperature: -20～60℃; Storage humidity: 10～90℃

1.8 Outline Dimension

Pls check outline dimension in the below picture 1-1:

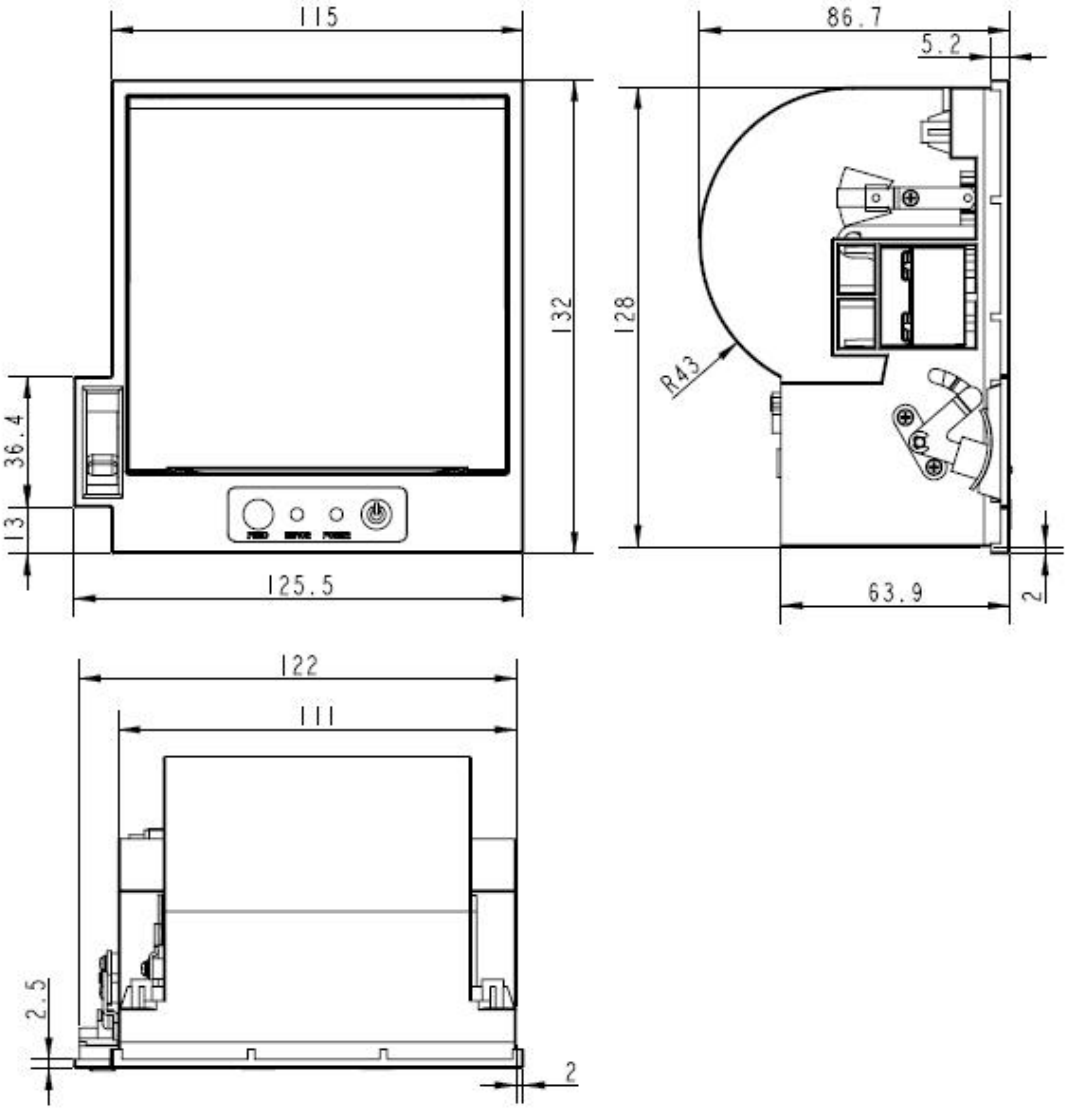

Fig.1-1

Installing hole dimension of customer's panel, as picture1-2:

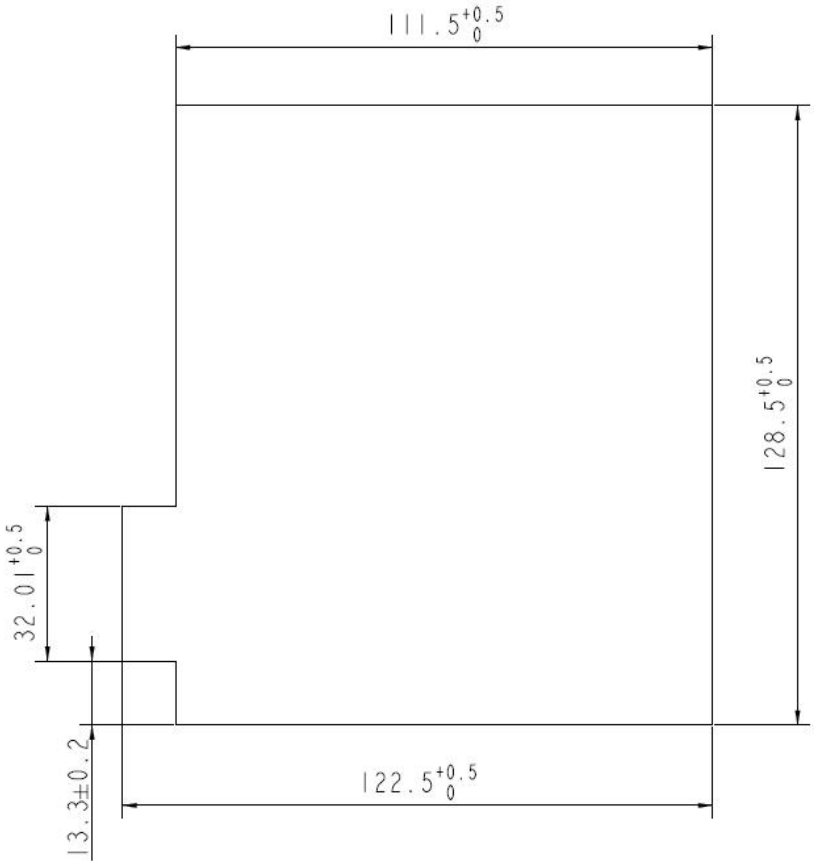

Fig.1-2

Chapter 2 Operation Specification

2.1 Printer Appearance

About the name of each part of printer, pls refer to picture 2-1:

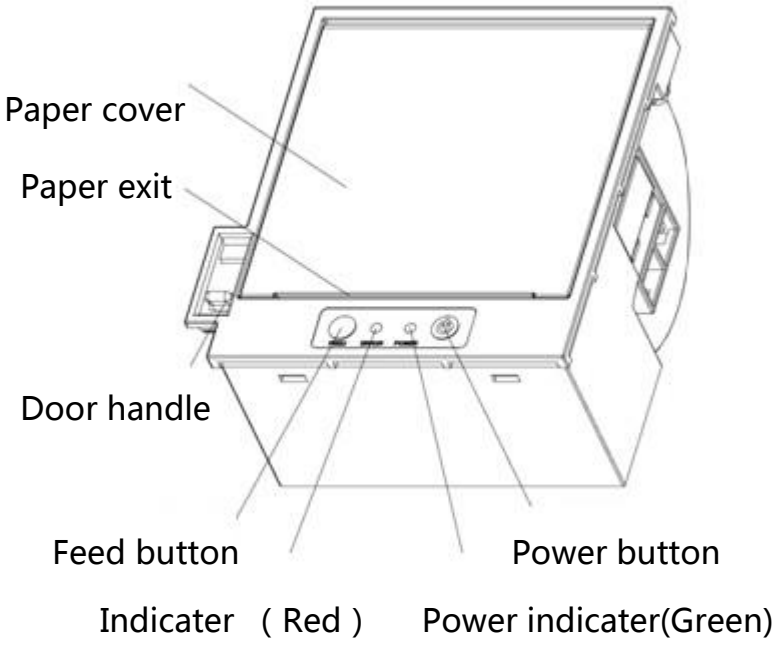
Paper cover
Paper exit
Door handle
Feed button
Power button
Indicater (Red)
Power indicater(Green)

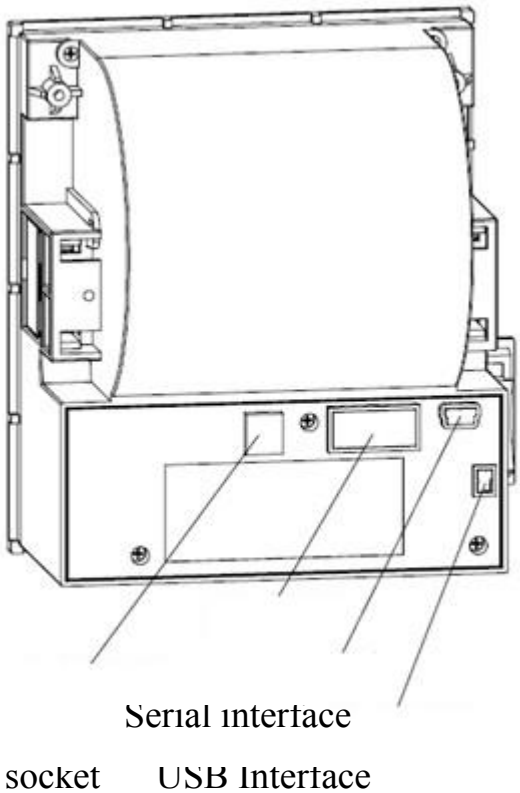
Serial interface
Power socket
USB Interface

Paper ending sensor socket

Fig.2-1 Printer Appearance

2.2 Installation of the printer

Embedded printer in the installing hole of customer's panel. open the printer paper cover, clockwise to tighten the two screws to complete the installation of the printer . Print installation shown in Figure 2-2.

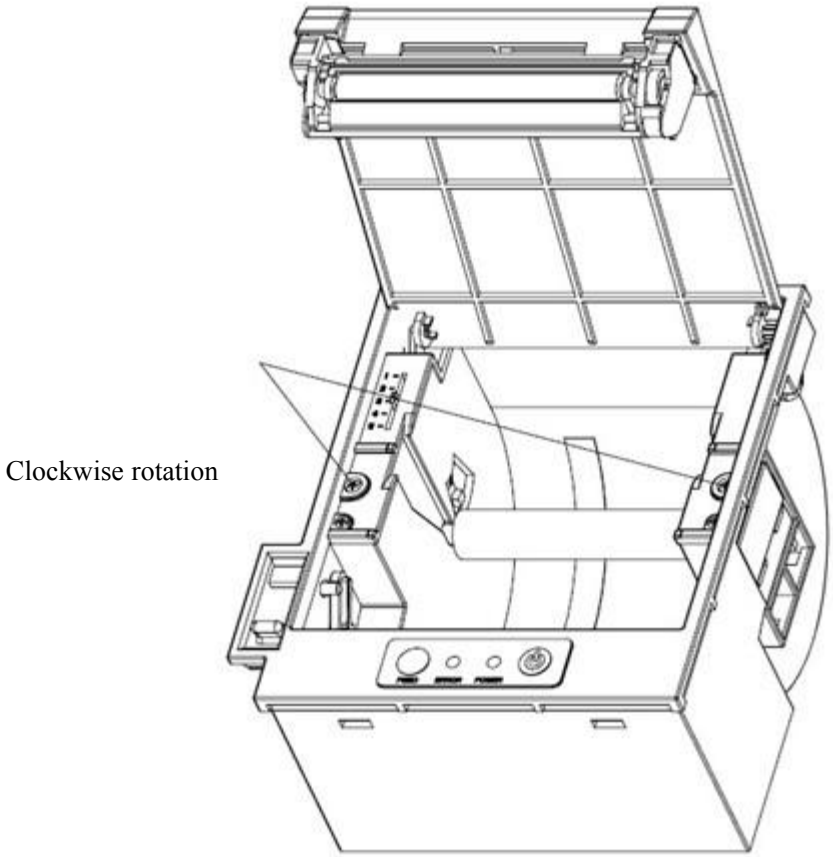

FIG 2-2

2.3 Paper Installation

2.3.1 Paper Loading

POS801 adopts 79.5mm±0.5mm width thermal paper roll.

Steps of Loading Thermal Paper are as below:

Hold down the upper cover button on the left side, open the movable upper cover, draw a certain length of the paper roll, put the paper end on the print head, close the upper cover and press it downwards lightly.

Caution!

1. Pay attention to the direction of loading paper,make the printing surface face to the print head.
2. Please don't feed or draw the paper forwards or backwards with hands.
3. Keep clean of the print head,avoid to influence the printing quality.

2.3.2 Solution to Paper Jam

If cutter was stuck, turn off the power, and turn on again, the cutter will be back to original position. If paper jam, open the paper cover, and take out the paper. If the cutter can not be back to the original position after power on again, open the cover of paper case directly, the cutter will be back to original

position before the cover opening.

2.4 Interface

2.4.1 Serial Interface

The serial interface of SP-POS801 printer is compatible with RS-232C, supports DTR/DSR and XON/XOFF handshaking protocols, uses IDC10 socket. The pin order of the serial port is as Fig.2-3 shows:

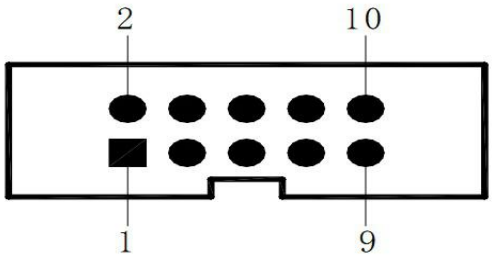

Fig.2-3 Pin Order of Serial Port

The pin assignment of serial interface is shown in Fig. 2-3:

Pin No.	Signal Name	Signal Direction	Source	Description
2	DTR	Output	Printer	Signal “MARK” means the host is busy and can not receive data.Signal “SPACE” means the host is ready to receive data.
3	TXD	Output	Printer	Printer transmits control code X-ON/X-OFF and data to host
4	DSR	Input	Host	Signal “MARK” means the host is busy and can not receive data.Signal “SPACE” means the host is

				ready to receive data.
5	RXD	Input	Host	Printer receives data from host
6	RTS	Output	Printer	Same with Pin No.2 DTR Signal
9	GND	----------	----------	Signal Ground

Fig. 2-3 The pin assignment of serial interface

Note: (1)“Source” denotes the source that signal come from;

(2)Logical signal level is EIA.

The baud rate and data structure in serial interface mode is 9600bps, 8-bit data bits, no parity bit and 1 stop bit. The serial interface of SP-POS801 can be connected to standard RS-232C interface. When it is connected to IBM PC or its compatible machine, connection can accord to Fig.2-4.

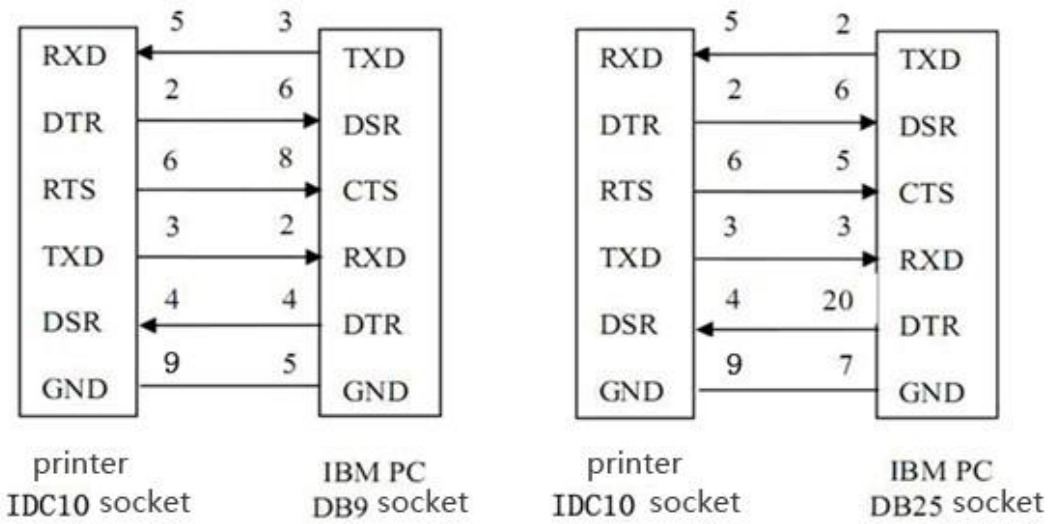

Fig.2-4 Connection between SP-POS801 and IBM PC Serial Interface

2.4.2 USB interface

The USB interface of the POS801 printer is mini-USB interface, outer appearance and pin assignment is shown in Figure 2-5:

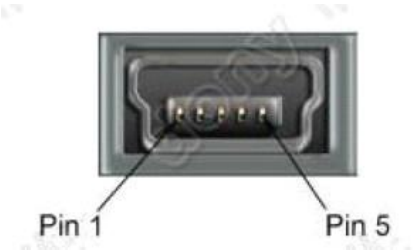

pin	function	description
1	V Bus	POWER + 5V
2	Data-	data-
3	Data+	data+
4		blank
5	GND	ground

Figure 2-5； Mini-USB socket and pin definitions

2.4.3 Power Connection

SP-POS801 printer uses the external power supply adopter as 24V±10％、2A, power socket is 2114S-02 model, as Fig. 2-6 shows:

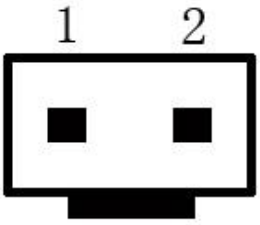

PIN NO	signal
1	24+VCD
2	ground

Fig.2-6 Power Socket

2.5 Buttons and Indicators

There are two buttons, one inner buzzer and two indicators for POS801.
【POWER】is power button. When printer is off, press【POWER】button for one

second, the buzzer will sound, then release【POWER】button. Printer gets into the normal working status. When the printer is on, press【POWER】button for one second, the buzzer will sound, then release 【POWER】button. Printer is powered off.

【FEED】is paper feed button. The function of this button is on/off can be set by print command. When the function of this button is on, press【FEED】button to feed paper; release【FEED】button to stop feeding button.

The buzzer can indicate the error and cutter status. Through parameters setting, the buzzer can be set into error alarm, paper-cut indicating or both above. The types of error status are same as ERROR indicator.

The green POWER light is the power indicator. POWER indicator lighting means the printer is power on.

The red ERROR light is error status indicator. It is off when the printer works normally; while it flashes or persismently lights when the priner has abnormal alarm.

If ERROR indicator flashes or persisment lights and the buzzer sounds, it means the printer has error.

According to different flashing types, the different errors of printer are indicated:

1. Irrecoverable error: the times of indicator flashing and buzzer sound indicate the error type, then indicator persismently light.
2. Recoverable error: the times of indicator flashing and buzzer sound indicate the error type, then indicator is persismently off.
3. Automaticly recoverable error: the indicator flashes and the buzzer sounds continuously.
4. Paper out: the indicator lights and the buzzer sounds persismently.

The details are as below,

a. Irrecoverable error, the indicator flashes several times, then persismently lights. Then cycle. The times of flashing means the error type.

Error type	Description	Types of ERROR flashing
Irrecoverable error	LED flashes once : Memory read - write errors	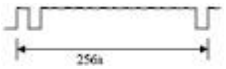
	LEDflash twice: Over-voltage	
	LED flashes three times: the voltage is lack	
	LED flashes four times : CPU Execution error (wrong	

	addression)	
	LED flashes five times : UIB error	
	LED flashes eight times : temperature detection of circuit is wrong	

b. Recoverable error: the indicator continuously flashes and persisment off for a period.

Error type	Description	Type of flash
Recoverable error	LED flashes once .the place of cutter is wrong	

c. Automatically recoverable error: the indicator flashes continuously.

Error type	Description	Type of flash
Automatically recoverable error	LED continues flashing ：the temperature of printing head is over high and the cover is wrong	

2.6 Turn on the printer

When the printer is off and paper case cover is closed, press the POWER button to turn on the printer and the ERROR indicator flashes twice, then indicator off. The printer enters into the normal working mode.

2.7 Self test

The self-test will check the condition of printer, if the printer prints out the self-test receipt correctly, it means the printer works normally except interface with host. Otherwise it needs to repair.
The self-test will print out: Manufacturer name, printer model, software version, interface type, default value of printer parameters, 96 ANK characters in ASCII code, content of default codepage (if language is set English) or name of Chinese character library (if the language is set Chinese), barcode

type, at last four lines black and white alternating icon.
Way of self-test: hold down【FEED】button and press【POWER】button to turn on the printer, after buzzer sounds, release 【POWER】button firstly, then release【FEED】button. At this time, printer will print out self-test receipt. The content is as below picture 2-7:

```
***   Self-Test   ***
Manufacturer;      SPRT
Model;             POS88VI
Version:           R-906 L1.00
Interface:         Parallel
Language:          Chinese
PrintFont:         12*24
PrintWidth:        64mm
PrintDensity:      Medium
PrintSpeed:        200mm/s
AutoCut:           Yes
BuzzerEnable:      Error ON
NoPaperReprint:    ON
BlackMark:         OFF
PaperSensor:       Medium
PrintDierction:    Normal
Command System:    ESC/POS
CodePage:          CP437
打印 ASCII 字符   0x20----0x80 处得 ascii 字符
GB18030 汉字库
Barcode Type
1D: UPCA,UPCE,EAN13,EAN8,CODE39
    ITF25,CODABAR,CODE93,CODE128
2D: PDF417,QR CODE,DATA Matrix
■□■□■□■□■□■□■□■□■□
  ■□■□■□■□■□■□■□■□■□
■□■□■□■□■□■□■□■□■□
  ■□■□■□■□■□■□■□■□■□
    ***   Completed   ***
```

Fig. 2-7

2.8 Hexadecimal Printing

Turn on the printer according to the step below, it will enter the mode of Hexadecimal Printing

1.Open the cover;

2.Hold down【POWER】button to turn on the printer

3.Close the cover, the printer will print out 3 lines as below:

Hexadecimal Dump
To terminate hexadecimal dump,
Press FEED button three times.

This means the printer has entered hexadecimal printing mode, and under this mode,all of the input will be printed out as hexadecimal number. Paper will

feed one line with single press of “FEED” button, after 3 times, it will print out “*** Completed ***”, and exit hexadecimal printing mode.

2.9 Setup of printer parameter

This function is for the setup of parameters.

Steps for setting parameters: Power off , open【Printer Roller】and press the【FEED】 button at the same time; release the 【FEED】 button after light flashing ; then press the 【FEED】twice and close the【Printer Roller】; printer is in the parameter setting mode . Print the first parameter which can be set and its current setup; Details can be seen according Appendix.

Steps for exiting of parameter setup: open【Printer Roller】and press the 【FEED】button; then close the【Printer Roller】, release the【FEED】button and save the setup of parameter and exit ;enter the normal mode ;the date will not saved if turn off the printer just through pressing 【FEED】 button.

2.10 Entering program upgrading mode

When printer power is off， open paper case cover firstly, then keep pressing FEED button, and press POWER button, then release POWER button after hearing the buzzer “one low and one high” sound. The printer will enter into program upgrading mode. At this time, the indicator flashes once each second. Notice: Both serial interface and USB interface can support program upgrading online.

APPENDIX A： Parameters Setting

This appendix is the method of setting default parameters of printer by buttons. Setting instruction: Using button for paper case cover to choose setting item. Press this button once, the setting item will go to the next and also print out the current value of this item. Using【FEED】button to choose the setting value of item. Press the button once, the setting value will go to the next.

Summary setting:

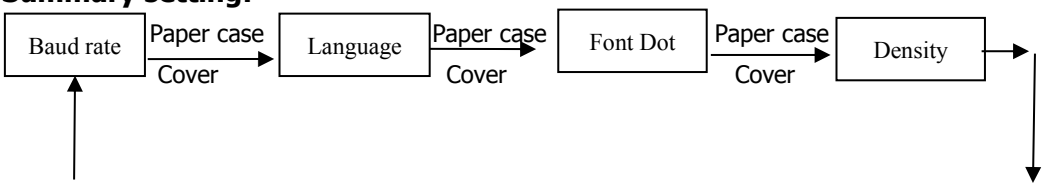

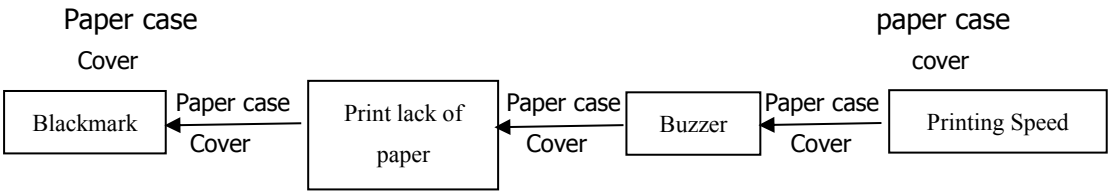

Baudrate:

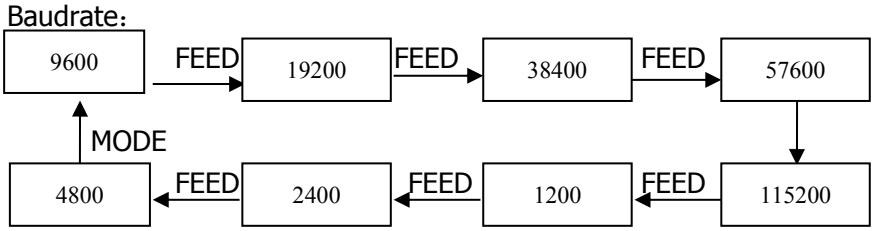

Language:

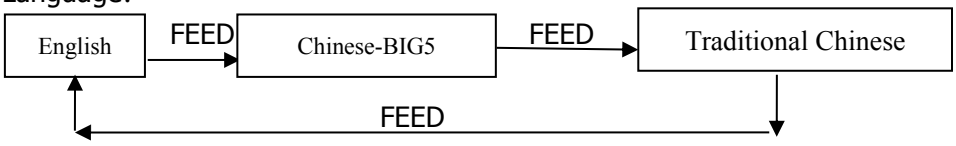

Font:

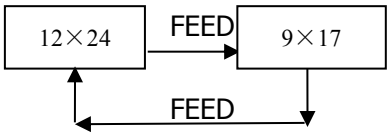

Density:

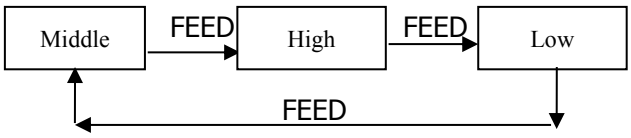

Buzzer:

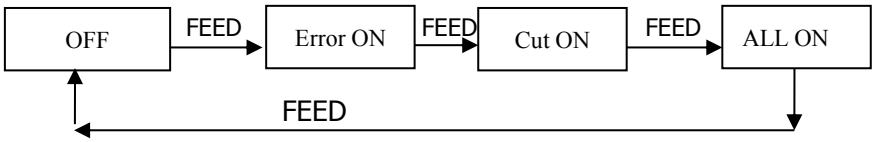

Print lack of paper:

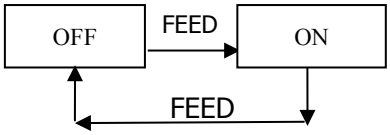

Blackmark:

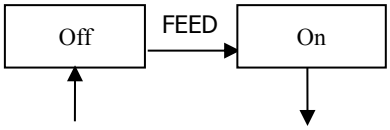

FEED